Assembly guide

Brick Premium Square Sandbox with Wide Seating Edge - GridGarden

PARTS LIST

no.	size (mm)	drawing	holes	qty
④	60 x 60 x 300	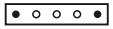	5× Ø12	**2**
③	60 x 120 x 480		8× Ø12	**2**
②	60 x 120 x 600		10× Ø12	**6**
②	60 x 60 x 600	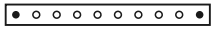	10× Ø12	**2**
①	60 x 60 x 1200		20× Ø12	**1**
	60 x 120 x 1200	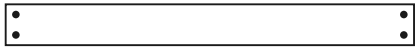	4× Ø12	**2**
	Connectors	●		**26**

15 parts + 26 dowels in total.

Parts are numbered by length (longest = 1).

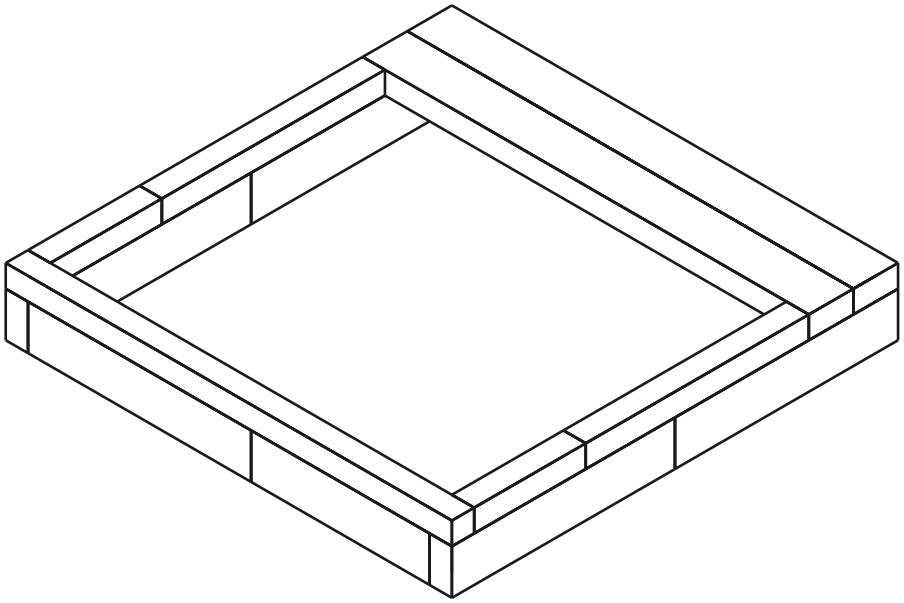

15	2	26
PARTS	COURSES	DOWELS

Course 1 / 2

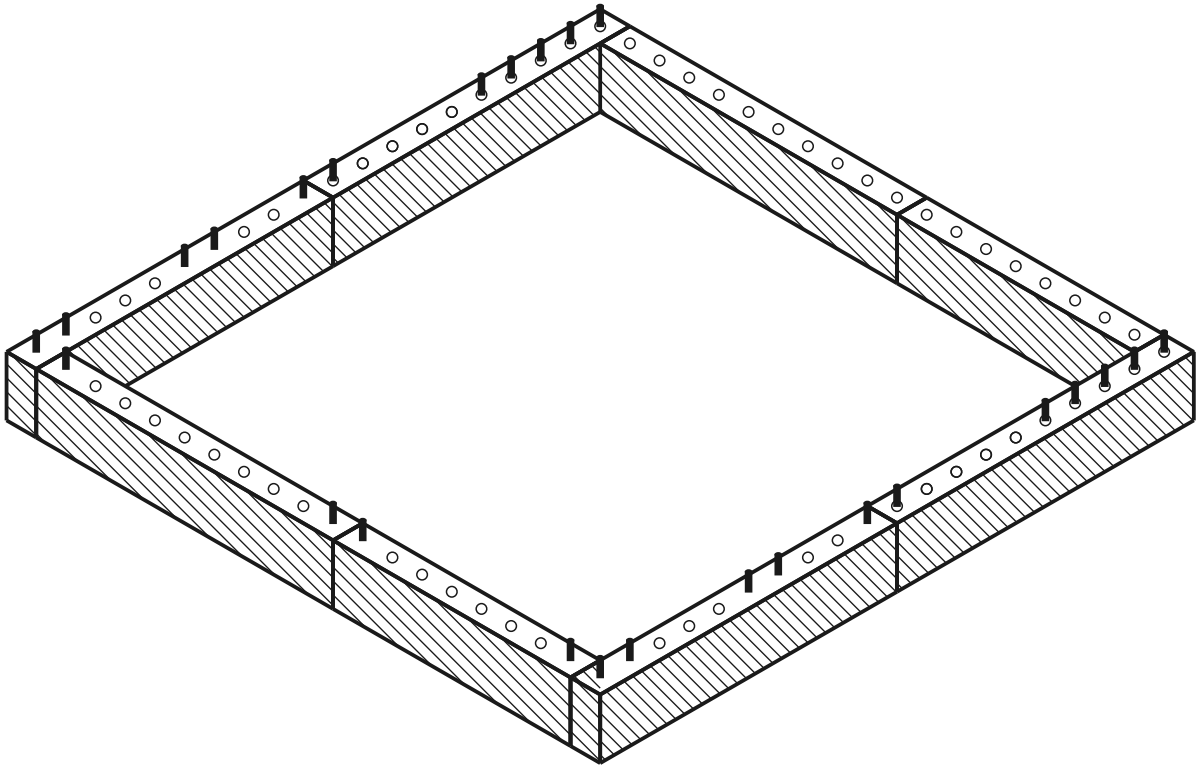

current course built dowel hole

TOP VIEW - WHICH PART GOES WHERE

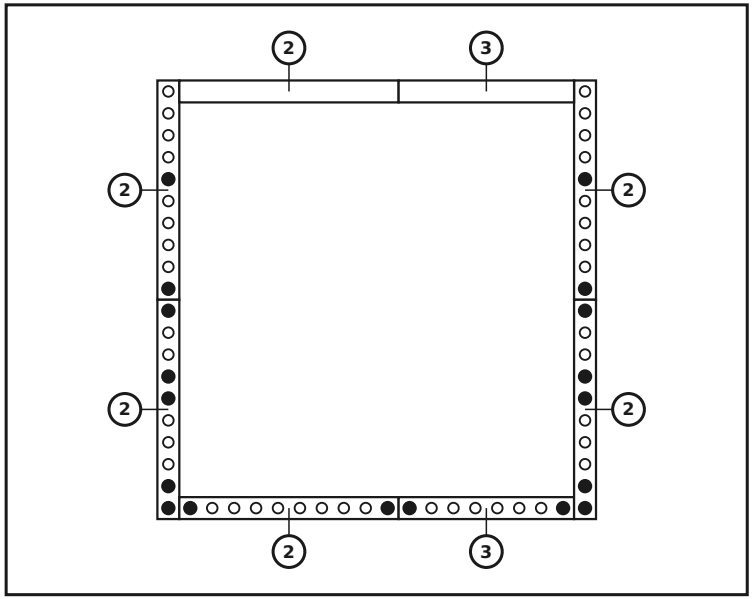

PARTS IN THIS COURSE

no.	size (mm)	drawing	holes	qty
3	60 x 120 x 480		8× Ø12	**2**
2	60 x 120 x 600		10× Ø12	**6**
	Connectors			**18**

Course 2 / 2 (top cap)

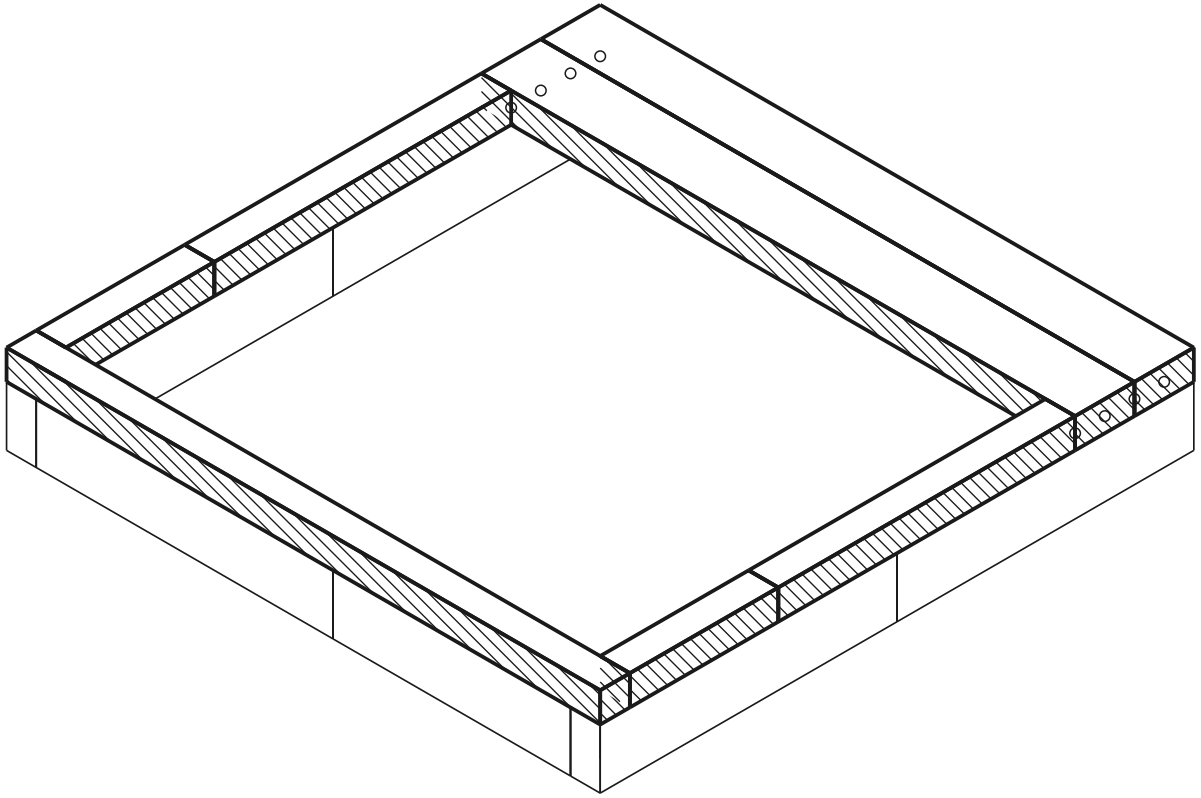

current course built dowel hole

TOP VIEW - WHICH PART GOES WHERE

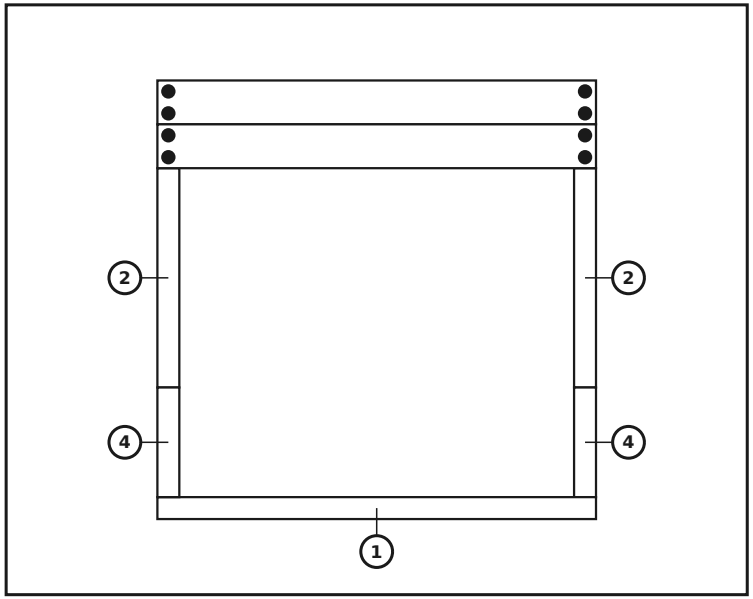

PARTS IN THIS COURSE

no.	size (mm)	drawing	holes	qty
4	60 x 60 x 300		5× Ø12	2
2	60 x 60 x 600		10× Ø12	2
1	60 x 60 x 1200		20× Ø12	1
	Connectors	●		0

Fitting the bench seat

size (mm)	drawing	holes	qty
60 x 120 x 1200		4× Ø12	2
Connectors	●		8

Finished model

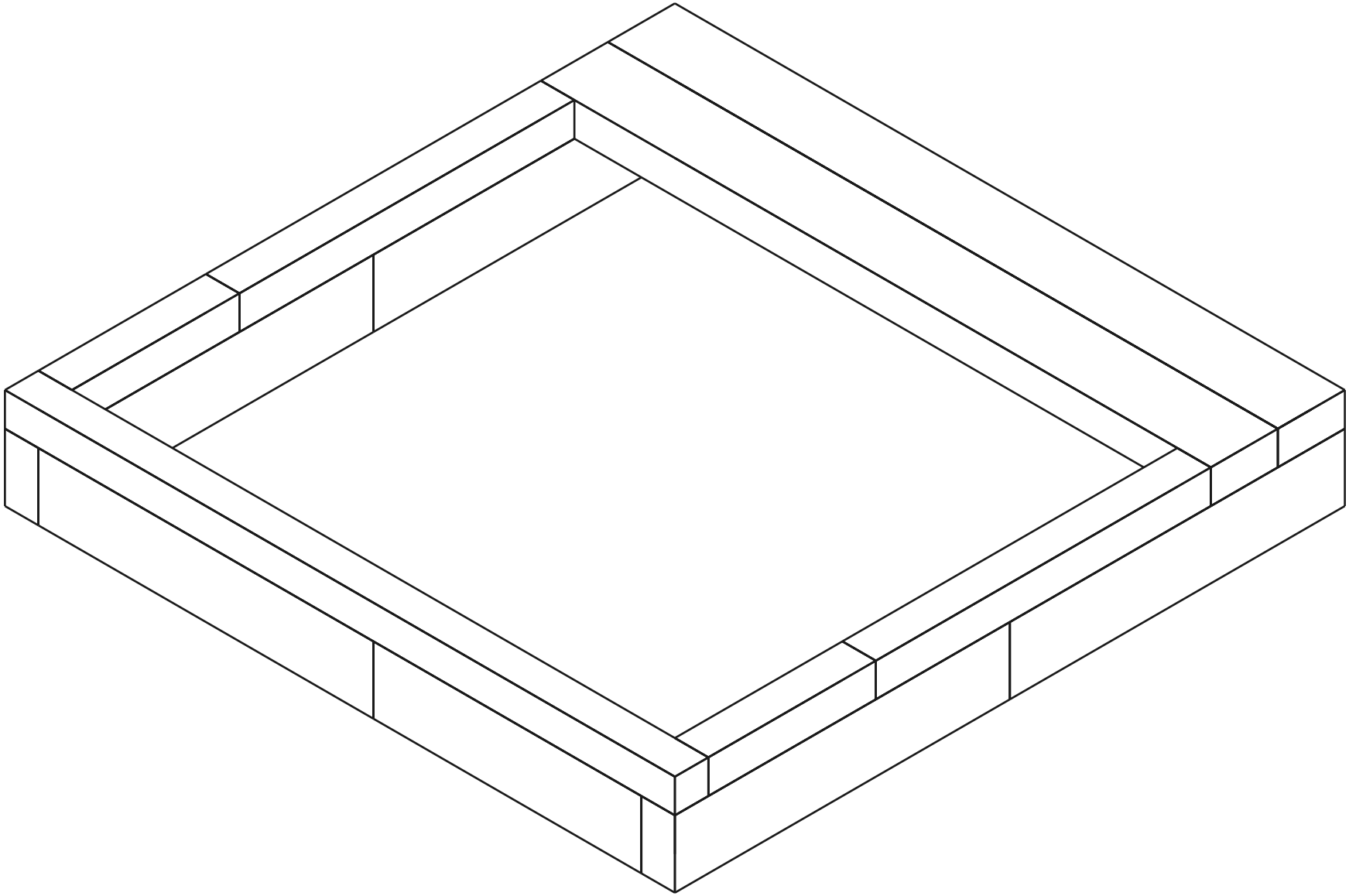

Bill of materials (BOM)

Part	Role	Qty
60×120×600 mm (BOTTOM)	bottom	6
60×120×480 mm (BOTTOM)	bottom	2
60×60×1200 mm (TOP)	top	1
60×60×600 mm (TOP)	top	2
60×60×300 mm (TOP)	top	2
Bench seat 1200mm	seat	2
Connector (12×70 mm pin)	-	26

Total: 15 parts