Assembly guide

Brick Premium Solid Garden Bench with Closed Sides - GridGarden

PARTS LIST

no.	size (mm)	drawing	holes	qty
3	60 x 120 x 420		7× Ø12	**4**
2	60 x 120 x 480		8× Ø12	**3**
1	60 x 120 x 600		10× Ø12	**5**
	60 x 120 x 1200	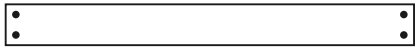	4× Ø12	**4**
	Connectors	●		**38**

16 parts + 38 dowels in total.

Parts are numbered by length (longest = 1).

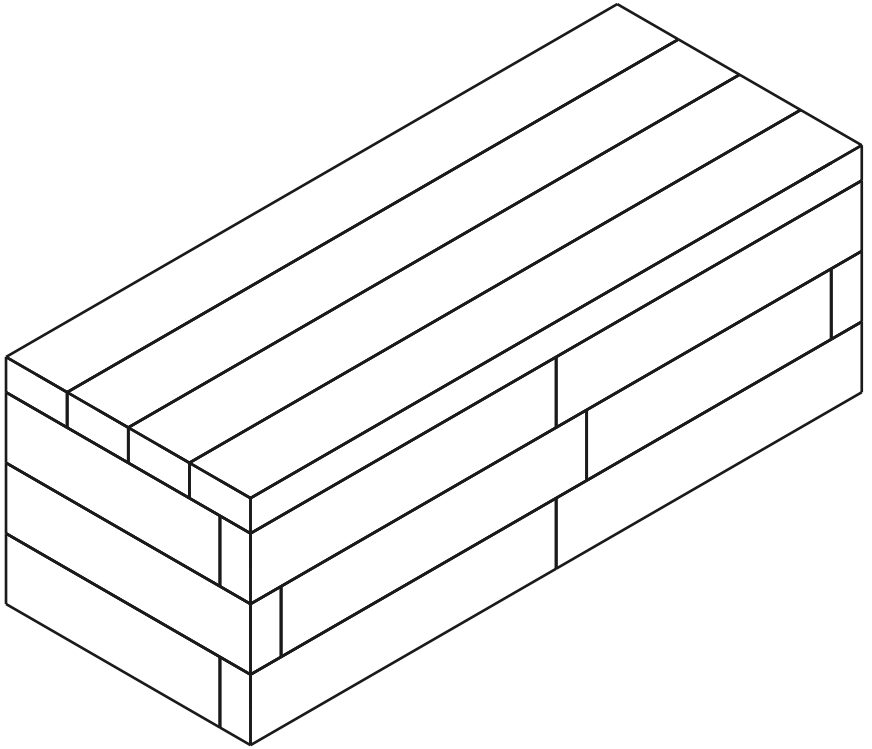

16 PARTS	**4** COURSES	**38** DOWELS

Course 1 / 4

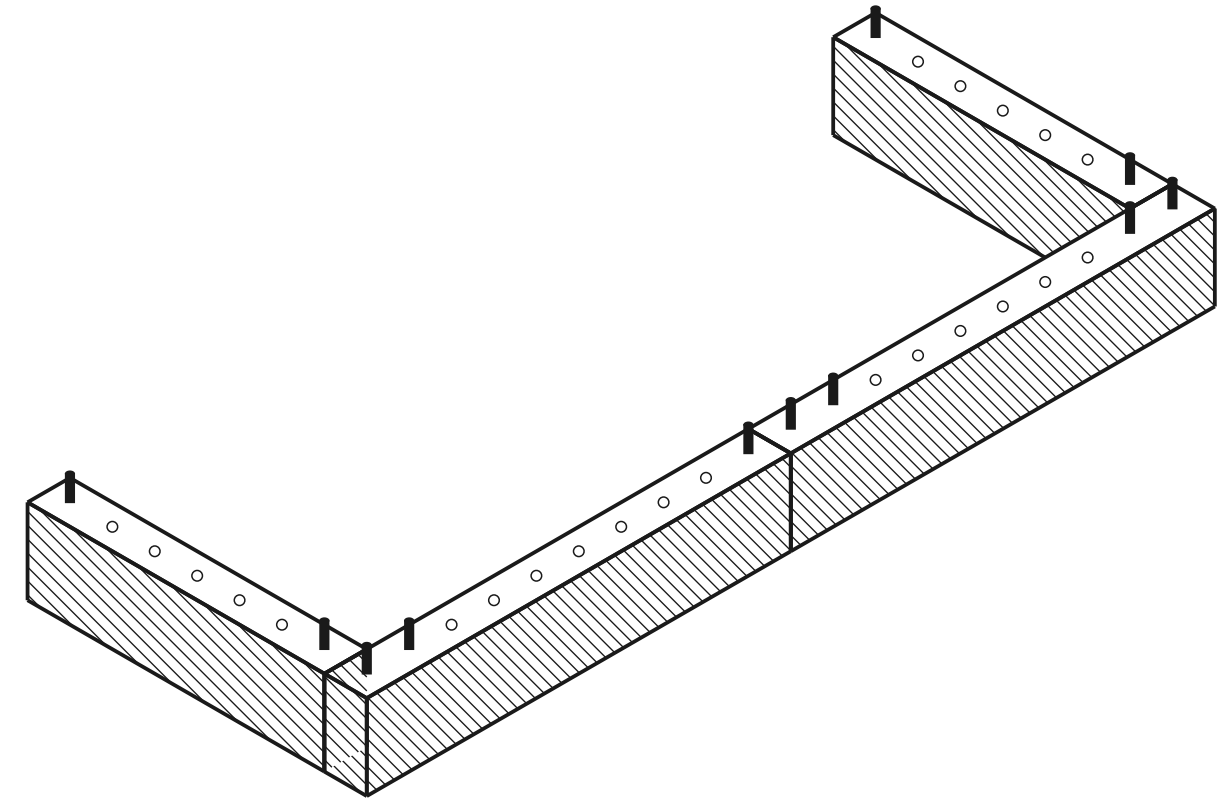

current course built dowel hole

TOP VIEW - WHICH PART GOES WHERE

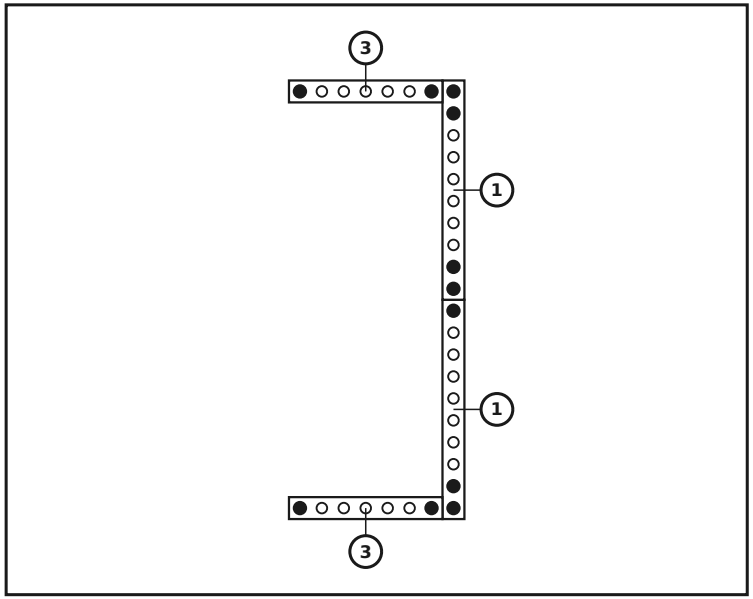

PARTS IN THIS COURSE

no.	size (mm)	drawing	holes	qty
3	60 x 120 x 420		7× Ø12	2
1	60 x 120 x 600		10× Ø12	2
	Connectors			11

Course 2 / 4

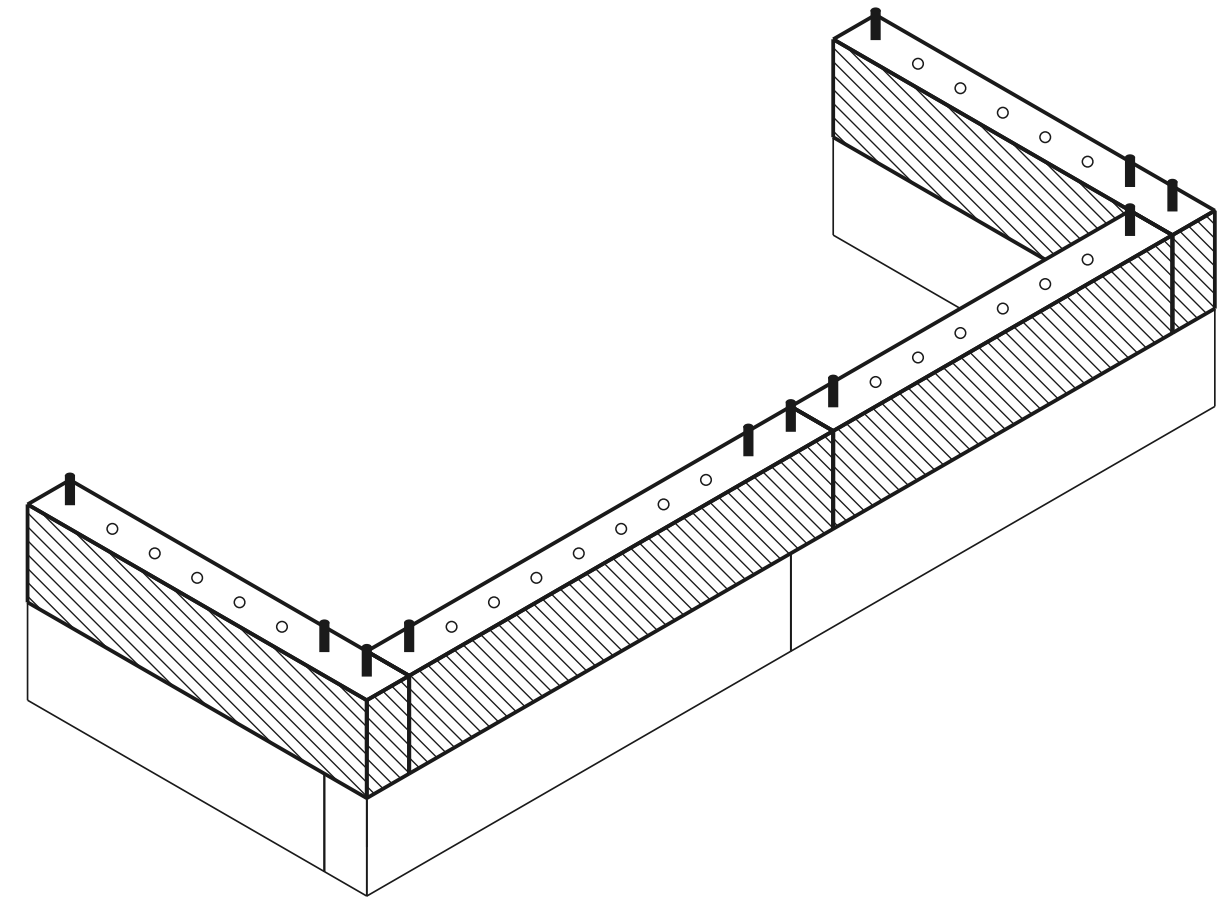

current course built dowel hole

TOP VIEW - WHICH PART GOES WHERE

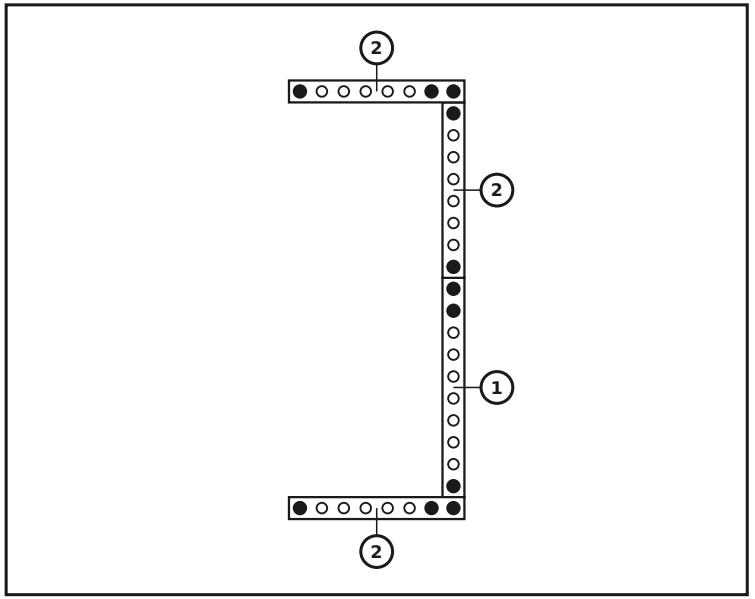

PARTS IN THIS COURSE

no.	size (mm)	drawing	holes	qty
2	60 x 120 x 480		8× Ø12	**3**
1	60 x 120 x 600		10× Ø12	**1**
	Connectors			**11**

Course 3 / 4

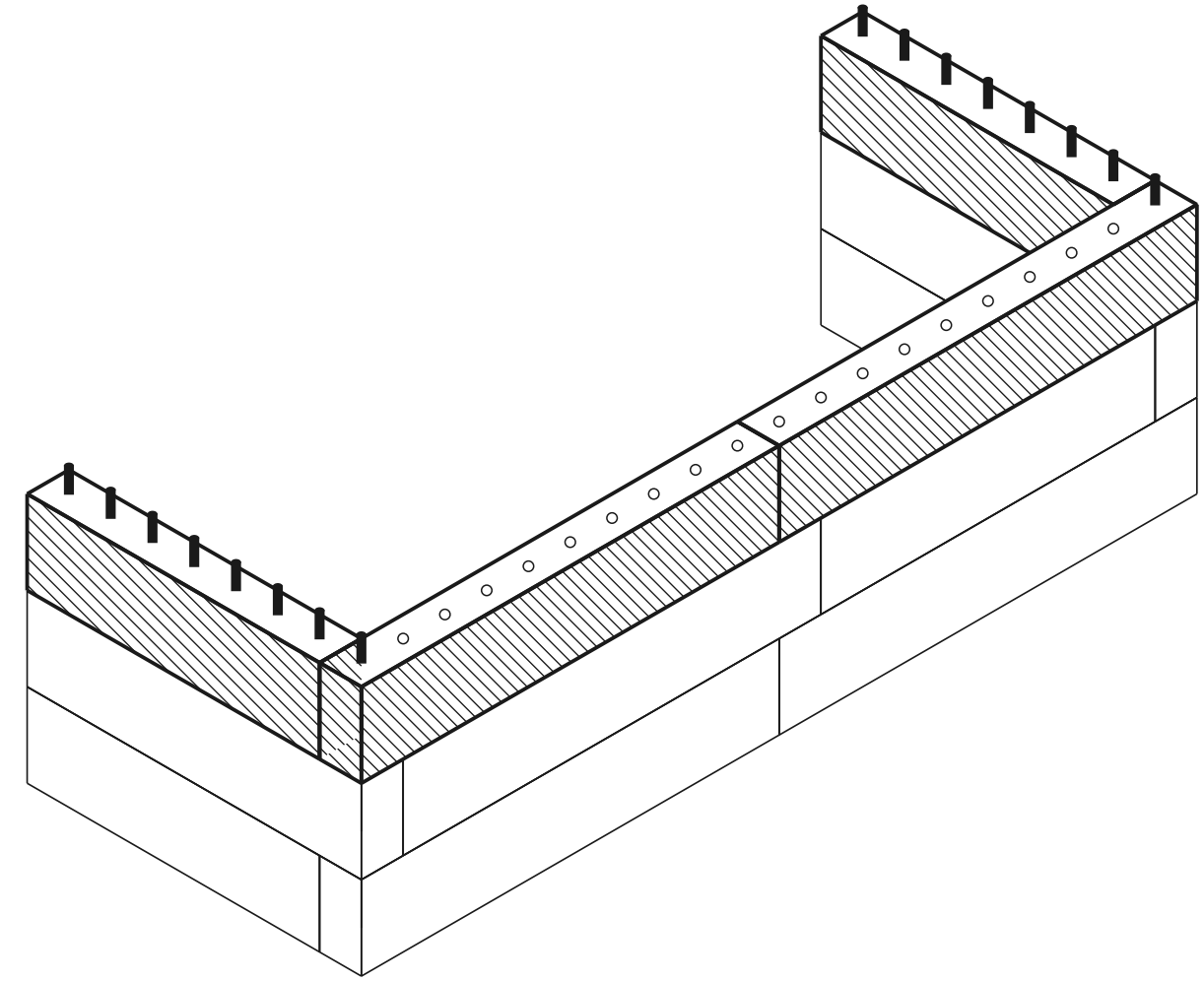

current course built dowel hole

TOP VIEW - WHICH PART GOES WHERE

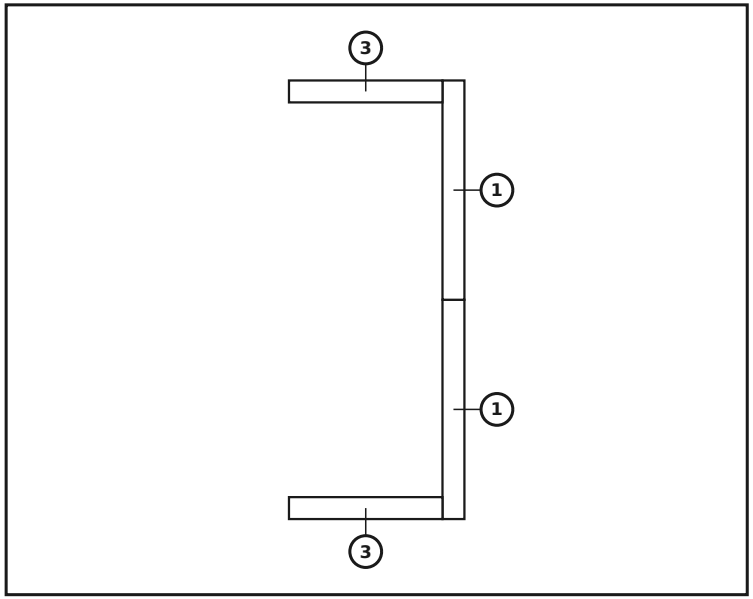

PARTS IN THIS COURSE

no.	size (mm)	drawing	holes	qty
3	60 x 120 x 420		7× Ø12	**2**
1	60 x 120 x 600		10× Ø12	**2**
	Connectors			**0**

Course 4 / 4 — Fitting the bench seat

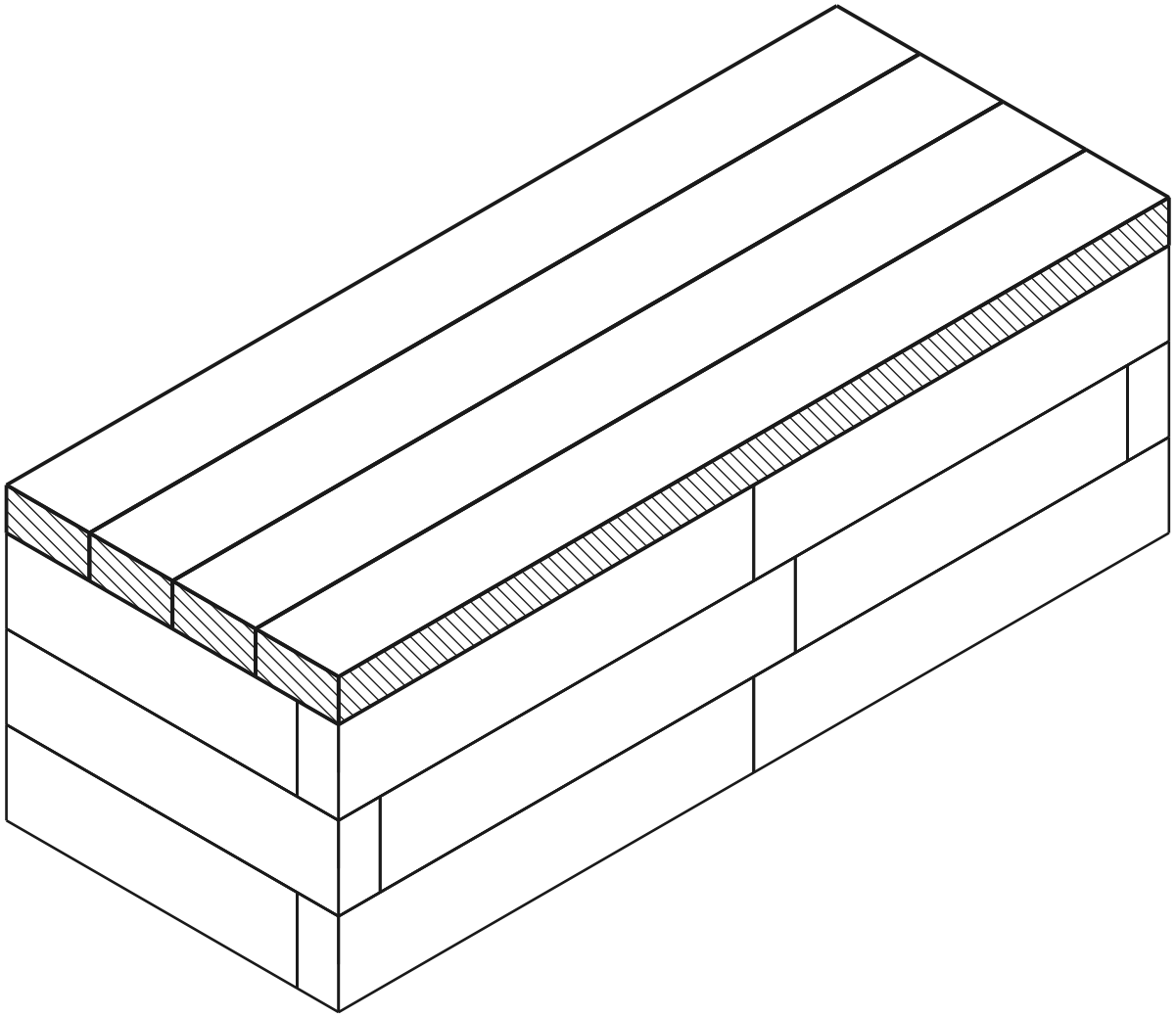

current course built dowel hole

TOP VIEW - WHICH PART GOES WHERE

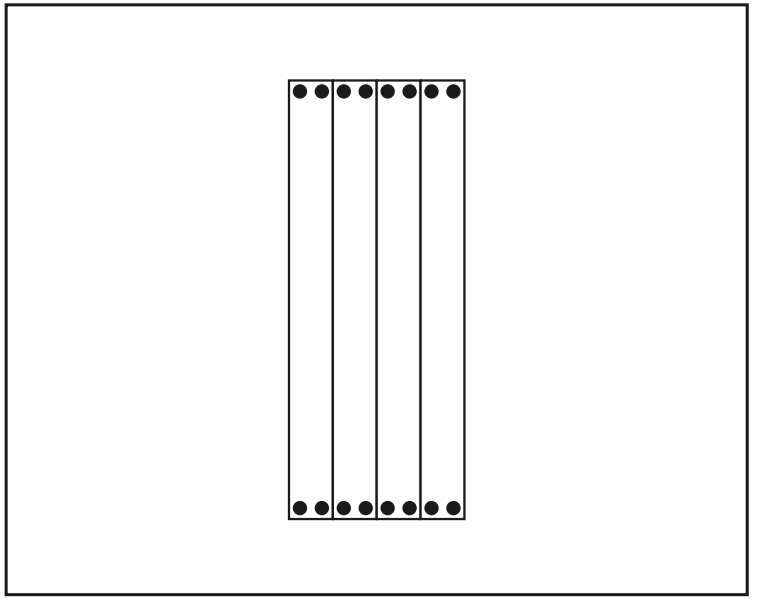

PARTS IN THIS COURSE

size (mm)	drawing	holes	qty
60 x 120 x 1200		4× Ø12	**4**
Connectors	●		**16**

Tap the connectors into the top course of the wall, then set the seat board onto them from above.

Finished model

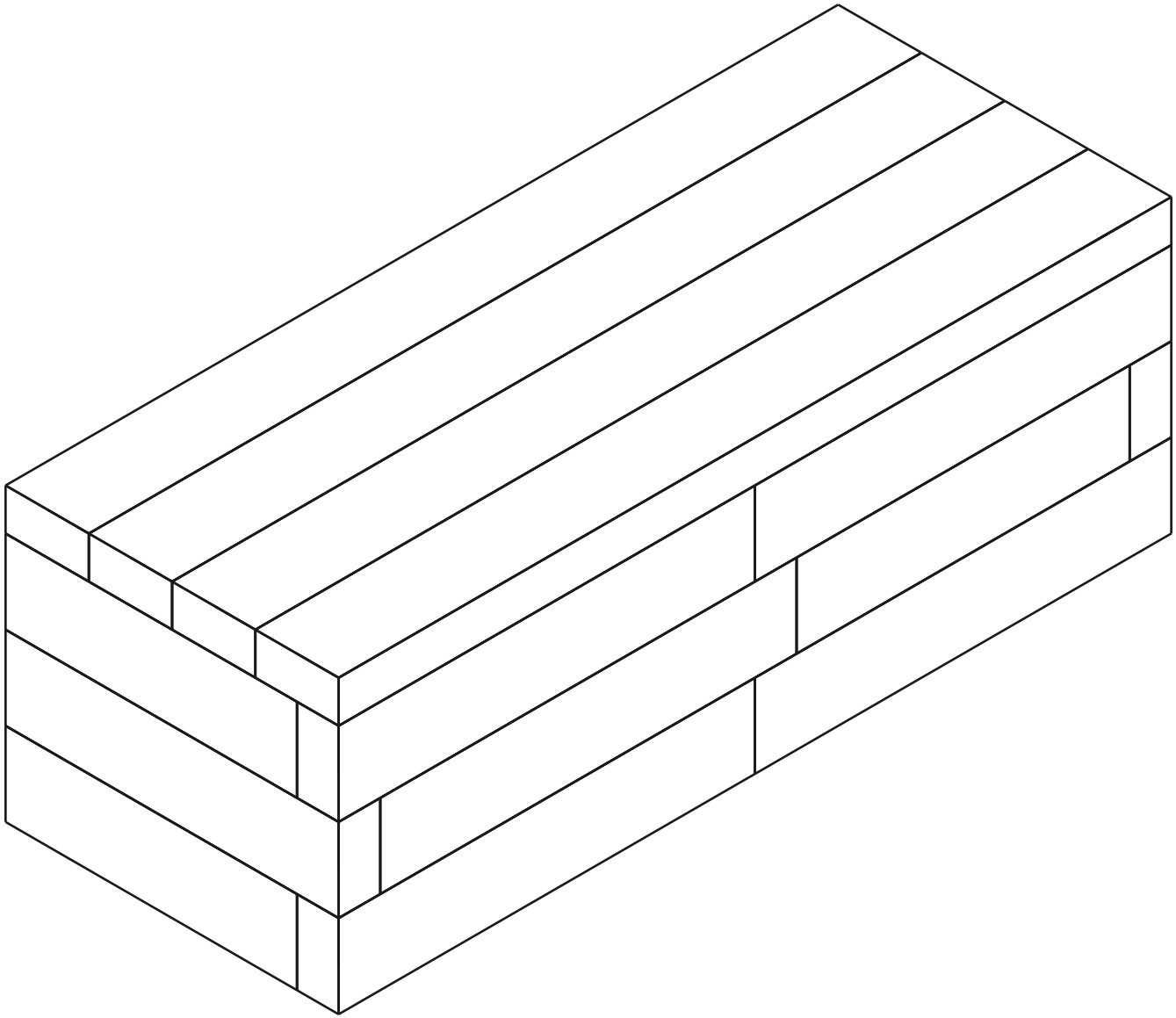

Bill of materials (BOM)

Part	Role	Qty
60×120×600 mm (BOTTOM)	bottom	2
60×120×420 mm (BOTTOM)	bottom	2
60×120×600 mm	middle	3
60×120×480 mm	middle	3
60×120×420 mm	middle	2
Bench seat 1200mm	seat	4
Connector (12×70 mm pin)	-	38

Total: 16 parts