Assembly guide

Vyvýšený záhon U-tvar Premium – M - GridGarden

PARTS LIST

no.	size (mm)	drawing	holes	qty
7	60 x 120 x 120		2× Ø12	**2**
6	60 x 60 x 180		3× Ø12	**1**
5	60 x 60 x 420		7× Ø12	**1**
4	60 x 120 x 480		8× Ø12	**9**
4	60 x 60 x 480		8× Ø12	**2**
3	60 x 120 x 540		9× Ø12	**2**
2	60 x 120 x 600		10× Ø12	**45**
2	60 x 60 x 600		10× Ø12	**3**
1	60 x 60 x 1200		20× Ø12	**6**
	Connectors	●		**169**

71 parts + 169 dowels in total.

Parts are numbered by length (longest = 1).

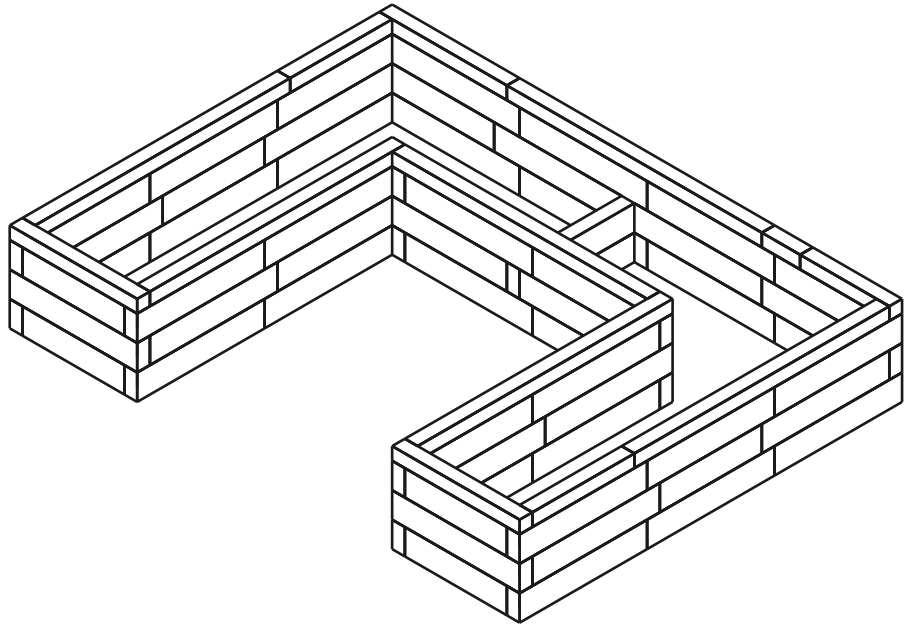

71	**4**	**169**
PARTS	COURSES	DOWELS

Course 1 / 4

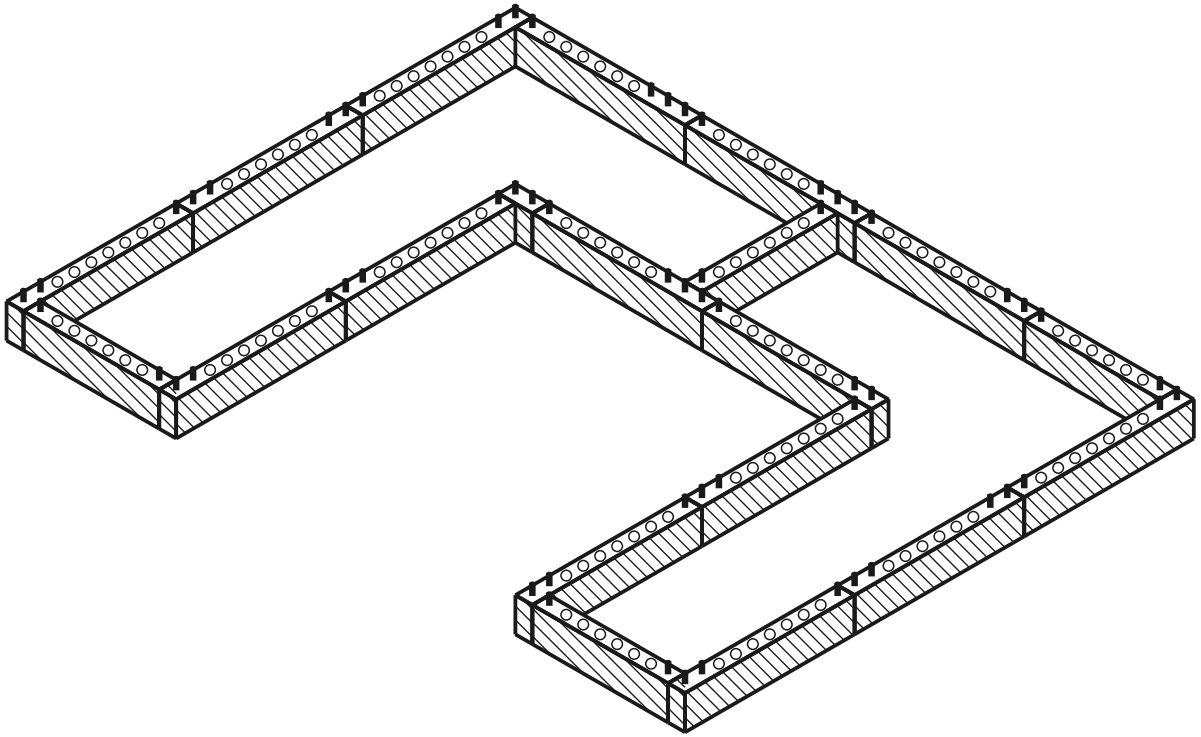

current course built dowel hole

TOP VIEW - WHICH PART GOES WHERE

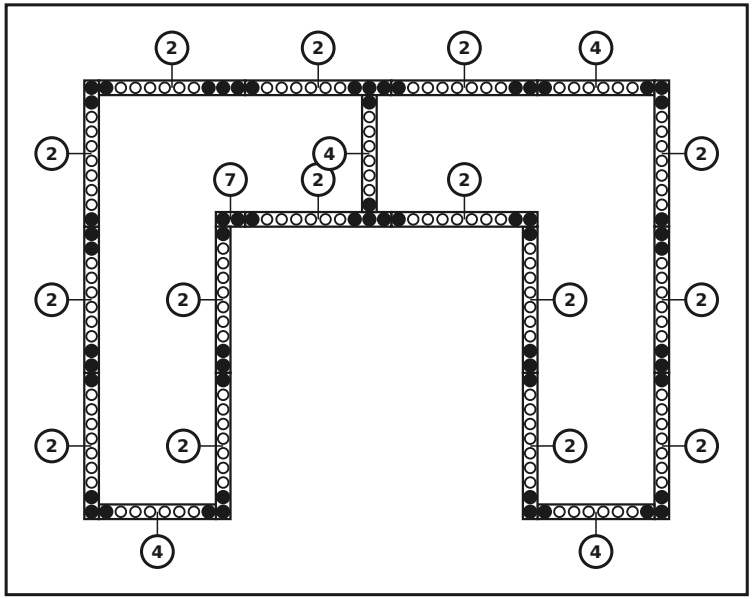

PARTS IN THIS COURSE

no.	size (mm)	drawing	holes	qty
7	60 x 120 x 120		2× Ø12	**1**
4	60 x 120 x 480		8× Ø12	**4**
2	60 x 120 x 600		10× Ø12	**15**
	Connectors			**60**

Course 2 / 4

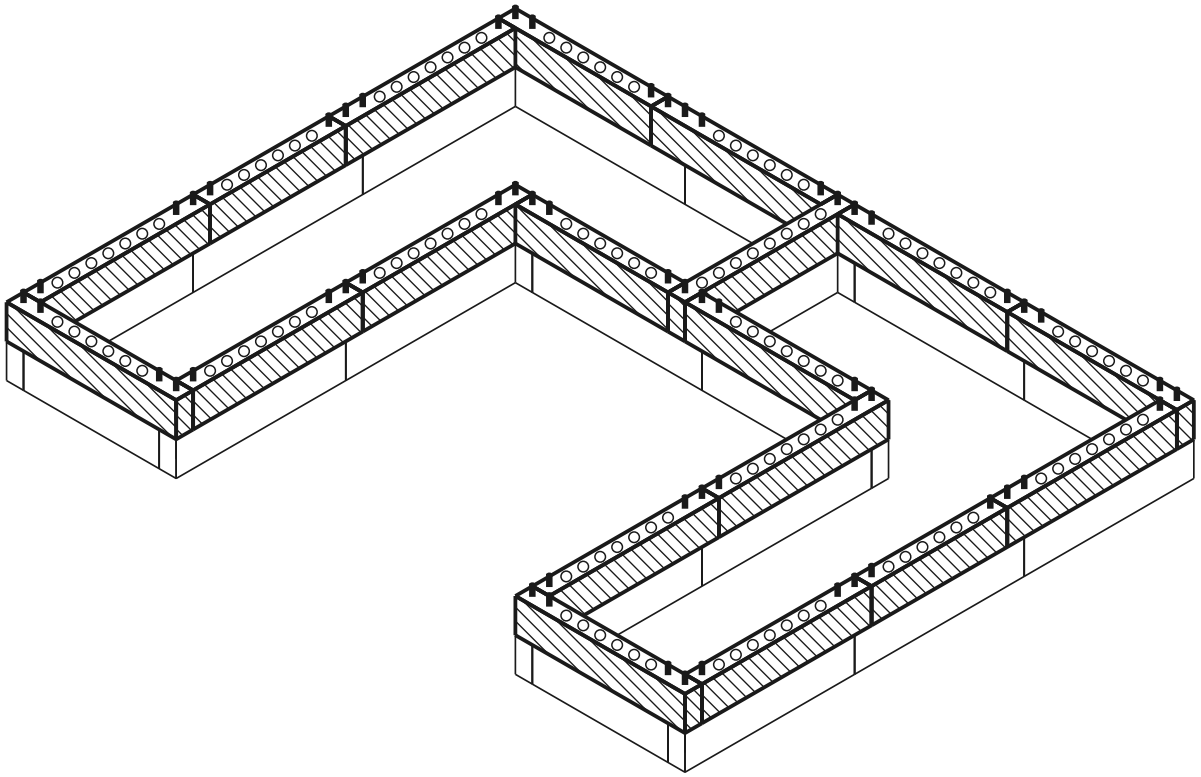

current course built dowel hole

TOP VIEW - WHICH PART GOES WHERE

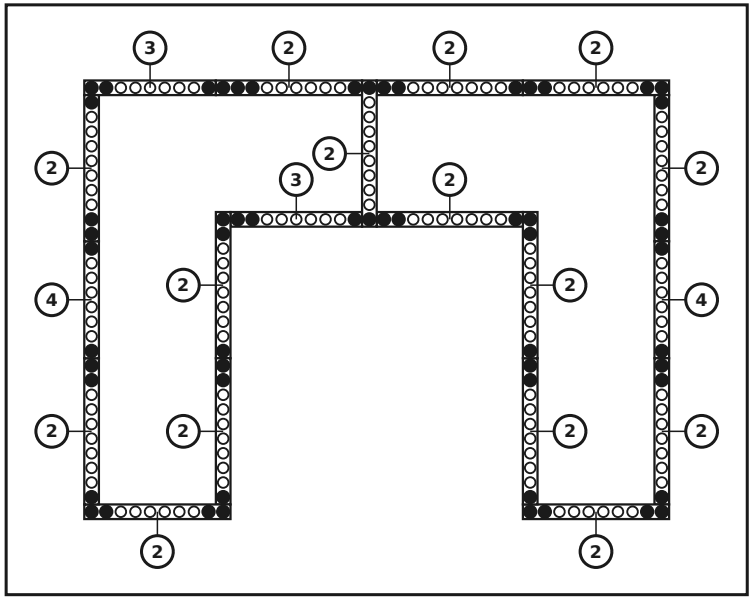

PARTS IN THIS COURSE

no.	size (mm)	drawing	holes	qty
4	60 x 120 x 480		8× Ø12	2
3	60 x 120 x 540		9× Ø12	2
2	60 x 120 x 600		10× Ø12	15
	Connectors			58

Course 3 / 4

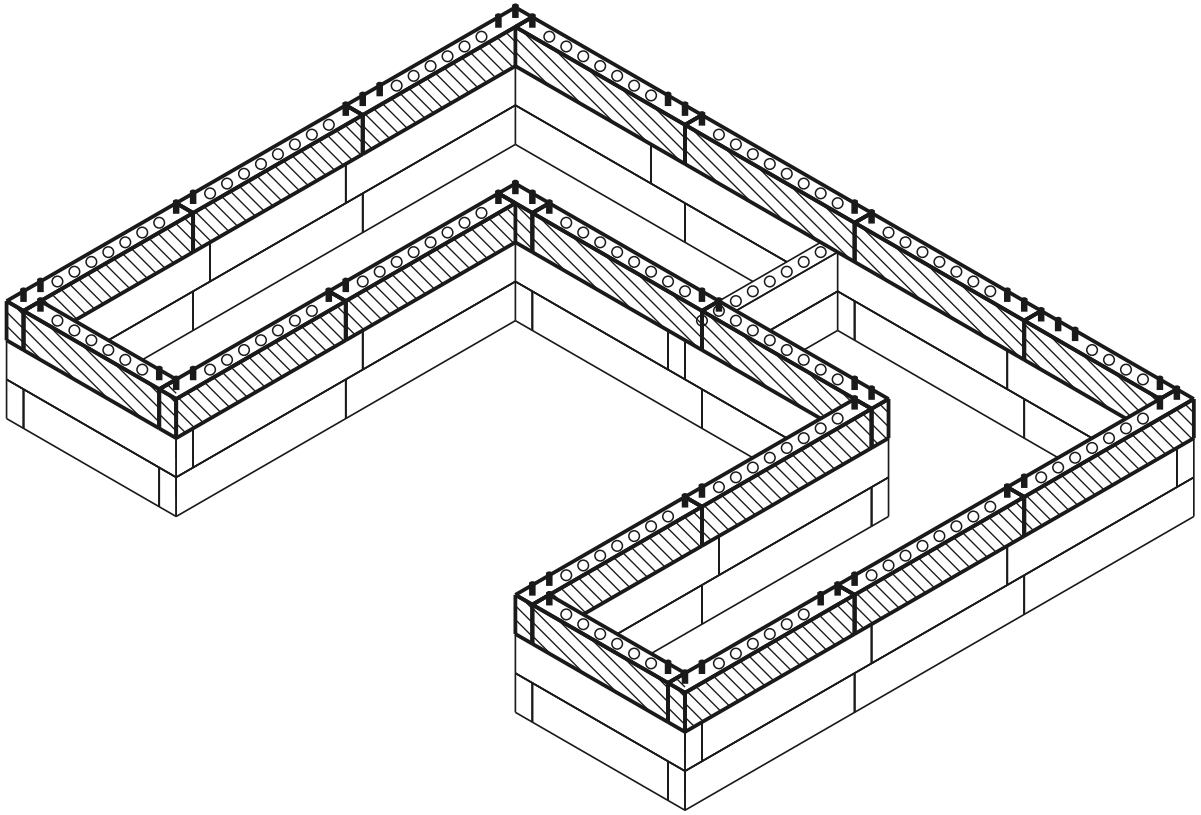

current course built dowel hole

TOP VIEW - WHICH PART GOES WHERE

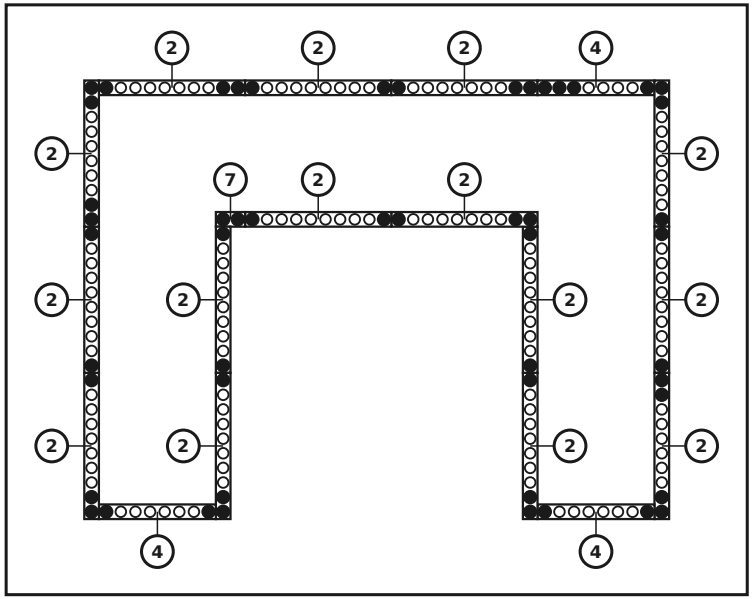

PARTS IN THIS COURSE

no.	size (mm)	drawing	holes	qty
7	60 x 120 x 120		2× Ø12	1
4	60 x 120 x 480		8× Ø12	3
2	60 x 120 x 600		10× Ø12	15
	Connectors			51

Course 4 / 4 (top cap)

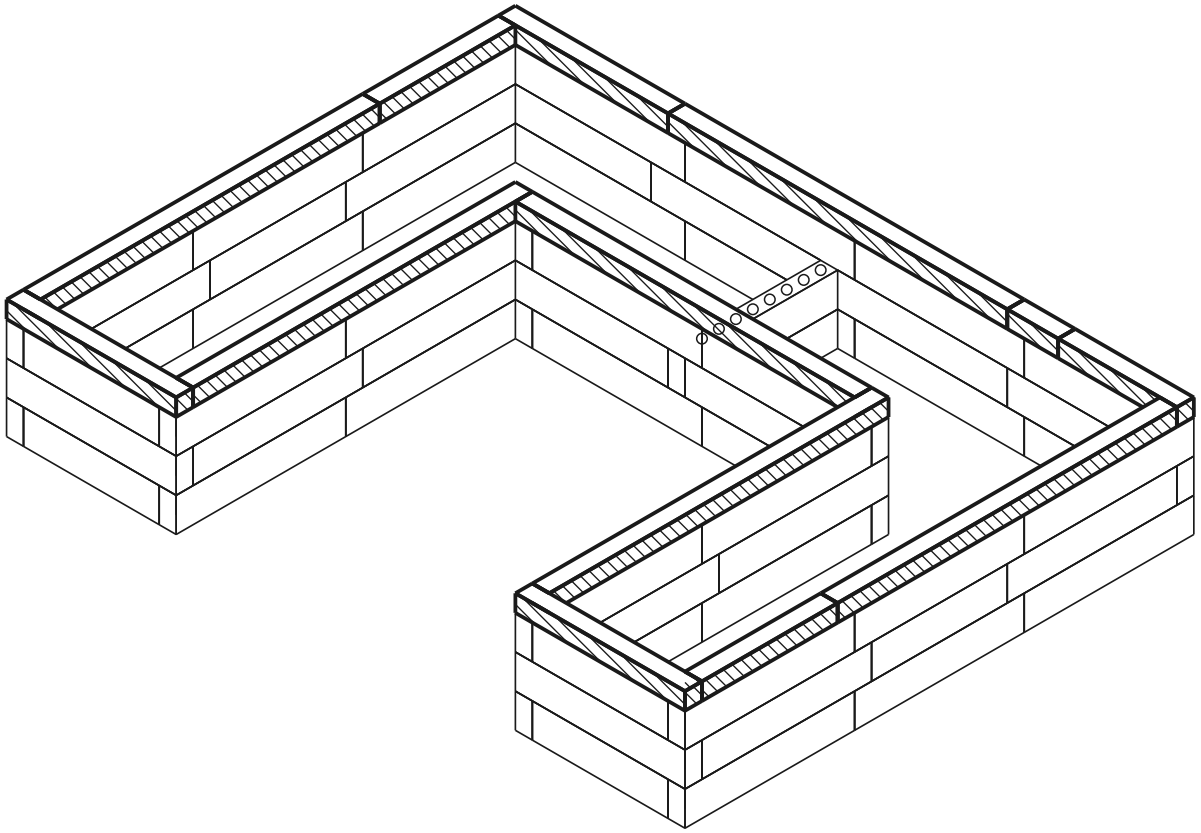

current course built dowel hole

TOP VIEW - WHICH PART GOES WHERE

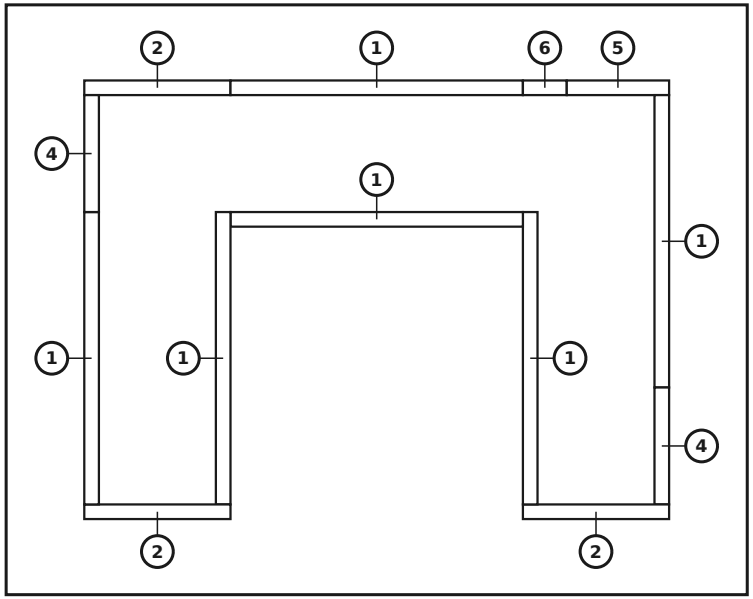

PARTS IN THIS COURSE

no.	size (mm)	drawing	holes	qty
6	60 x 60 x 180		3× Ø12	1
5	60 x 60 x 420		7× Ø12	1
4	60 x 60 x 480		8× Ø12	2
2	60 x 60 x 600		10× Ø12	3
1	60 x 60 x 1200		20× Ø12	6
	Connectors	●		0

Finished model

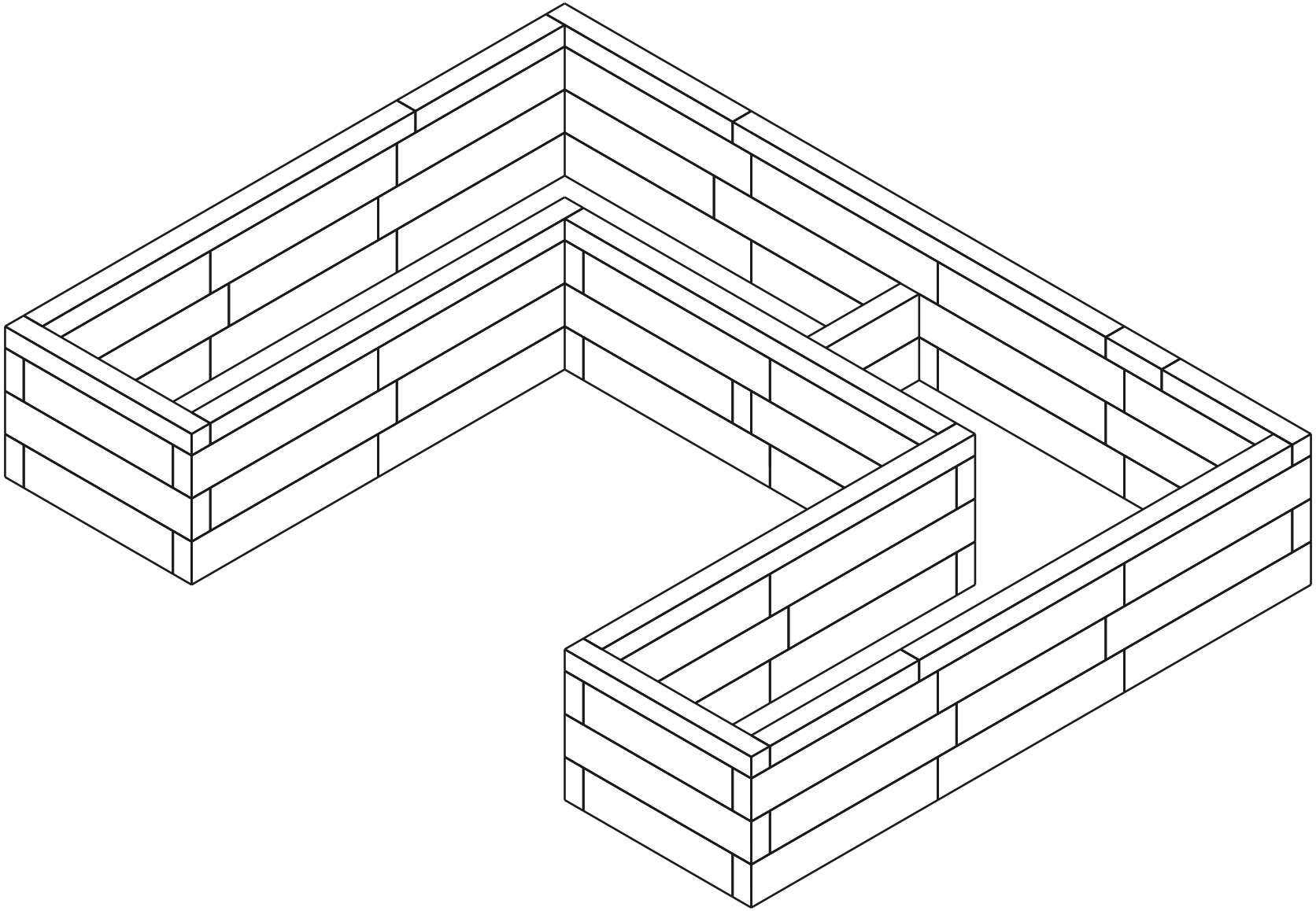

Bill of materials (BOM)

Part	Role	Qty
60×120×600 mm (BOTTOM)	bottom	15
60×120×480 mm (BOTTOM)	bottom	4
60×120×120 mm (BOTTOM)	bottom	1
60×120×600 mm	middle	30
60×120×540 mm	middle	2
60×120×480 mm	middle	5
60×120×120 mm	middle	1
60×60×1200 mm (TOP)	top	6
60×60×600 mm (TOP)	top	3
60×60×480 mm (TOP)	top	2
60×60×420 mm (TOP)	top	1
60×60×180 mm (TOP)	top	1
Connector (12×70 mm pin)	-	169

Total: 71 parts