Assembly guide

Vyvýšený záhon L-tvar Premium – M - GridGarden

PARTS LIST

no.	size (mm)	drawing	holes	qty
7	60 x 120 x 180		3× Ø12	**3**
7	60 x 60 x 180		3× Ø12	**1**
6	60 x 120 x 240		4× Ø12	**3**
6	60 x 60 x 240		4× Ø12	**1**
5	60 x 120 x 300		5× Ø12	**3**
5	60 x 60 x 300		5× Ø12	**1**
4	60 x 120 x 360		6× Ø12	**3**
4	60 x 60 x 360		6× Ø12	**1**
3	60 x 120 x 540		9× Ø12	**6**
3	60 x 60 x 540		9× Ø12	**2**
2	60 x 120 x 600		10× Ø12	**24**
2	60 x 60 x 600		10× Ø12	**4**
1	60 x 60 x 1200		20× Ø12	**2**
	Connectors	●		**144**

54 parts + 144 dowels in total.

Parts are numbered by length (longest = 1).

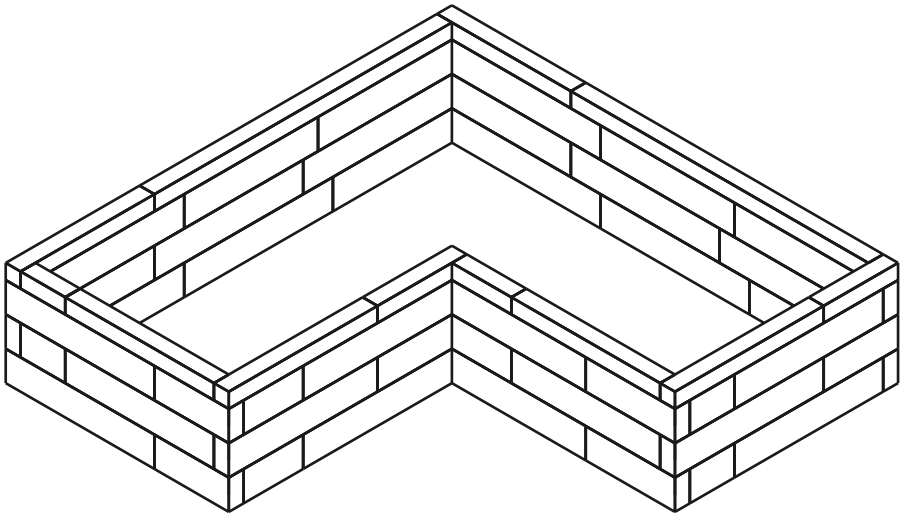

54	**4**	**144**
PARTS	COURSES	DOWELS

Course 1 / 4

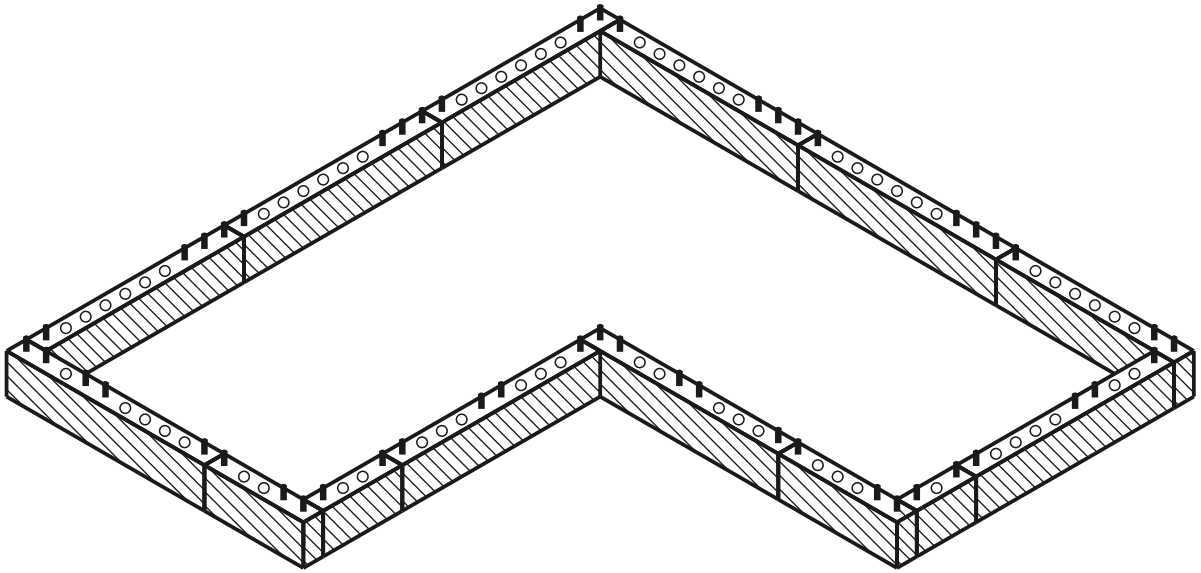

current course built dowel hole

TOP VIEW - WHICH PART GOES WHERE

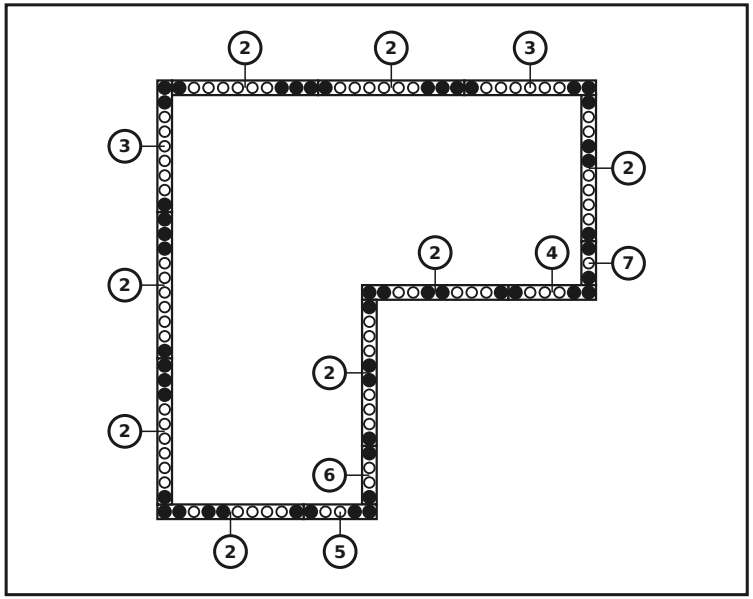

PARTS IN THIS COURSE

no.	size (mm)	drawing	holes	qty
7	60 x 120 x 180		3× Ø12	1
6	60 x 120 x 240		4× Ø12	1
5	60 x 120 x 300		5× Ø12	1
4	60 x 120 x 360		6× Ø12	1
3	60 x 120 x 540		9× Ø12	2
2	60 x 120 x 600		10× Ø12	8
	Connectors			50

Course 2 / 4

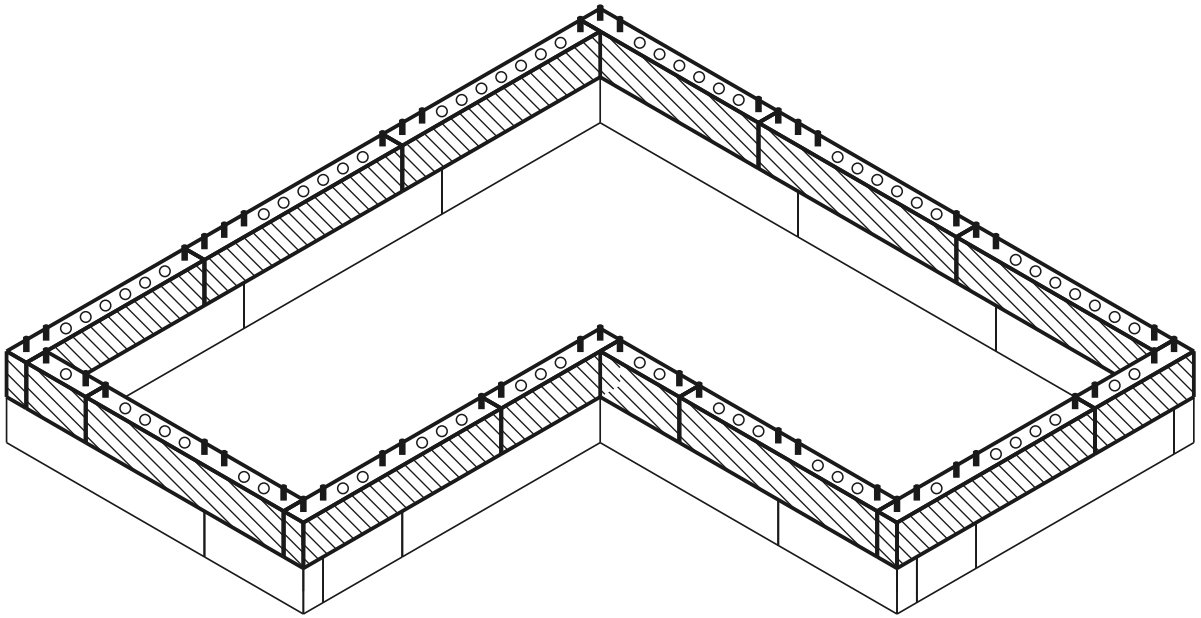

current course built dowel hole

TOP VIEW - WHICH PART GOES WHERE

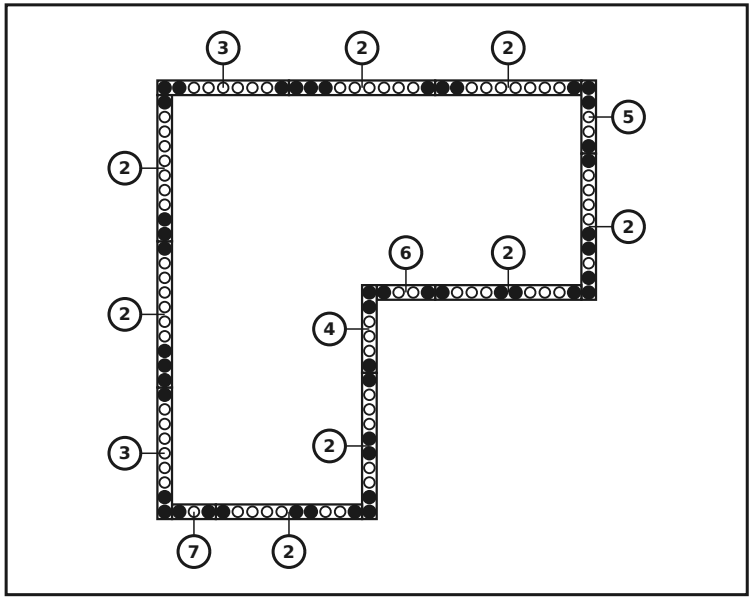

PARTS IN THIS COURSE

no.	size (mm)	drawing	holes	qty
7	60 x 120 x 180	• ○ •	3× Ø12	1
6	60 x 120 x 240	• ○ ○ •	4× Ø12	1
5	60 x 120 x 300	• ○ ○ ○ •	5× Ø12	1
4	60 x 120 x 360	• ○ ○ ○ ○ •	6× Ø12	1
3	60 x 120 x 540	• ○ ○ ○ ○ ○ ○ ○ •	9× Ø12	2
2	60 x 120 x 600	• ○ ○ ○ ○ ○ ○ ○ ○ •	10× Ø12	8
	Connectors	●		48

Course 3 / 4

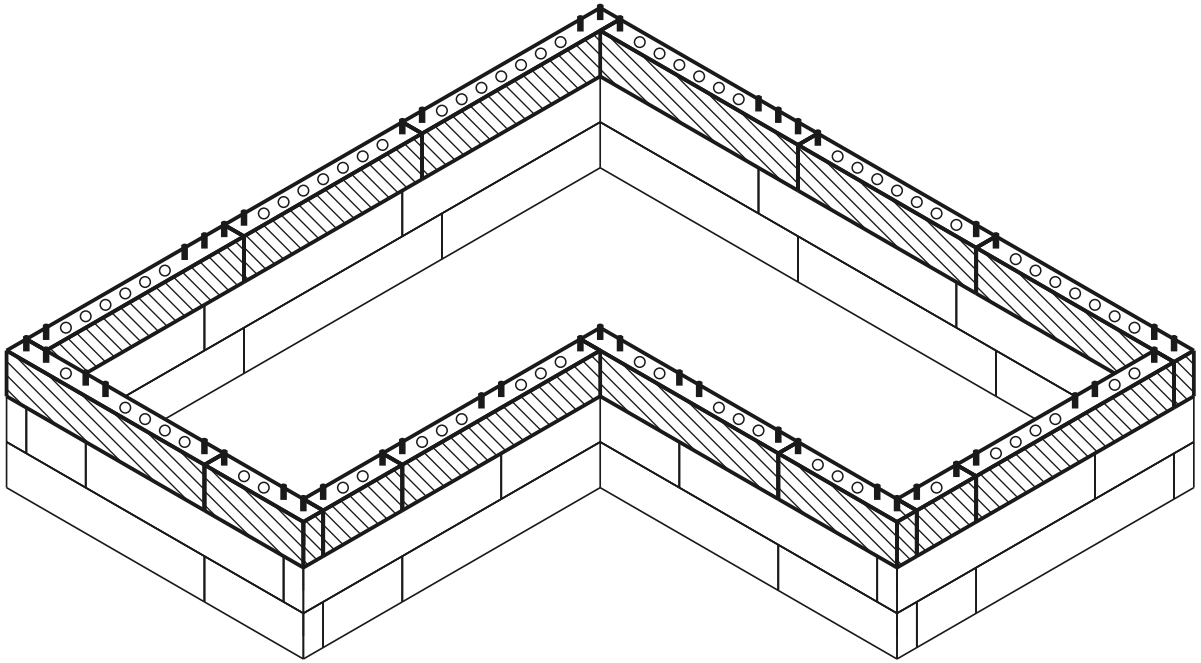

current course built dowel hole

TOP VIEW - WHICH PART GOES WHERE

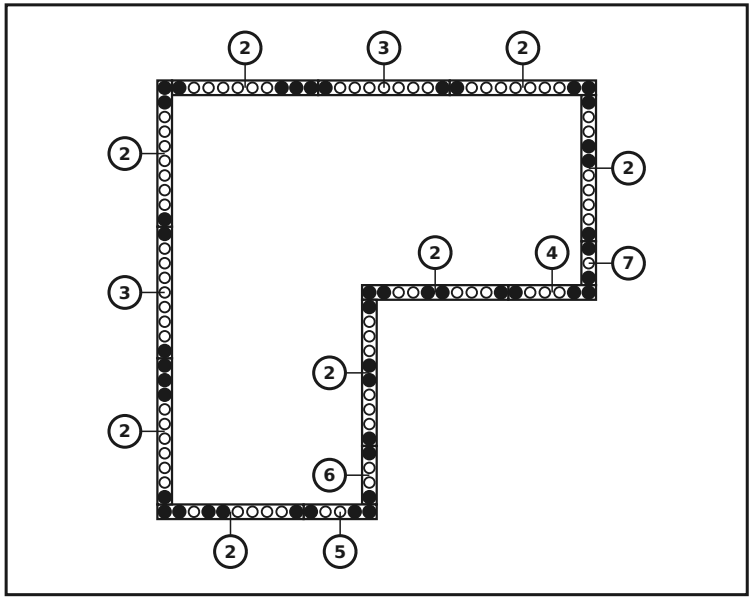

PARTS IN THIS COURSE

no.	size (mm)	drawing	holes	qty
7	60 x 120 x 180		3× Ø12	1
6	60 x 120 x 240		4× Ø12	1
5	60 x 120 x 300		5× Ø12	1
4	60 x 120 x 360		6× Ø12	1
3	60 x 120 x 540		9× Ø12	2
2	60 x 120 x 600		10× Ø12	8
	Connectors			46

Course 4 / 4 (top cap)

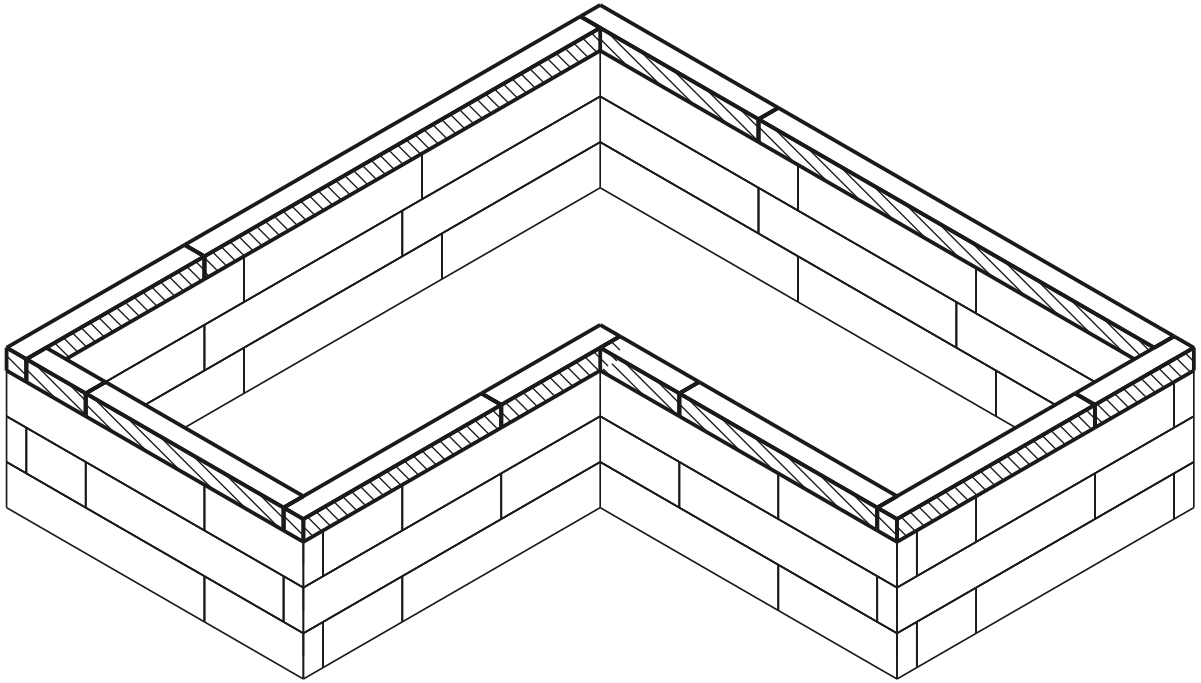

current course built dowel hole

TOP VIEW - WHICH PART GOES WHERE

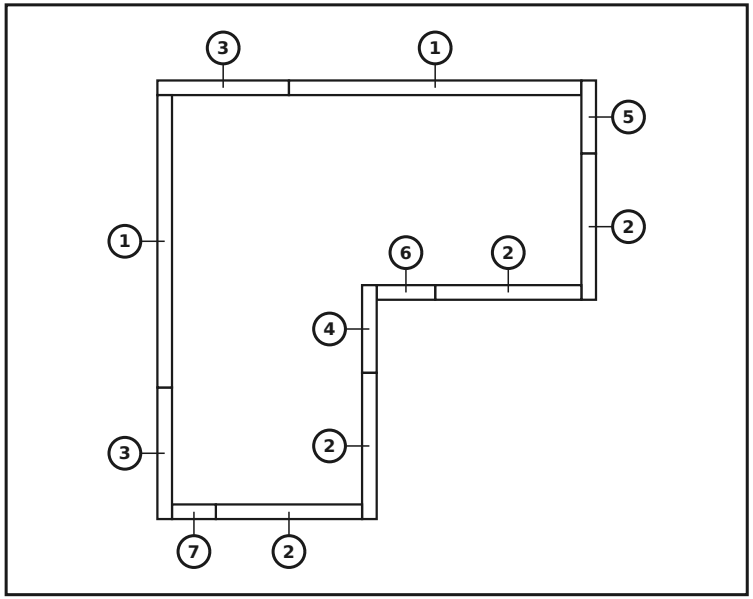

PARTS IN THIS COURSE

no.	size (mm)	drawing	holes	qty
7	60 x 60 x 180		3× Ø12	1
6	60 x 60 x 240		4× Ø12	1
5	60 x 60 x 300		5× Ø12	1
4	60 x 60 x 360		6× Ø12	1
3	60 x 60 x 540		9× Ø12	2
2	60 x 60 x 600		10× Ø12	4
1	60 x 60 x 1200		20× Ø12	2
	Connectors	●		0

Finished model

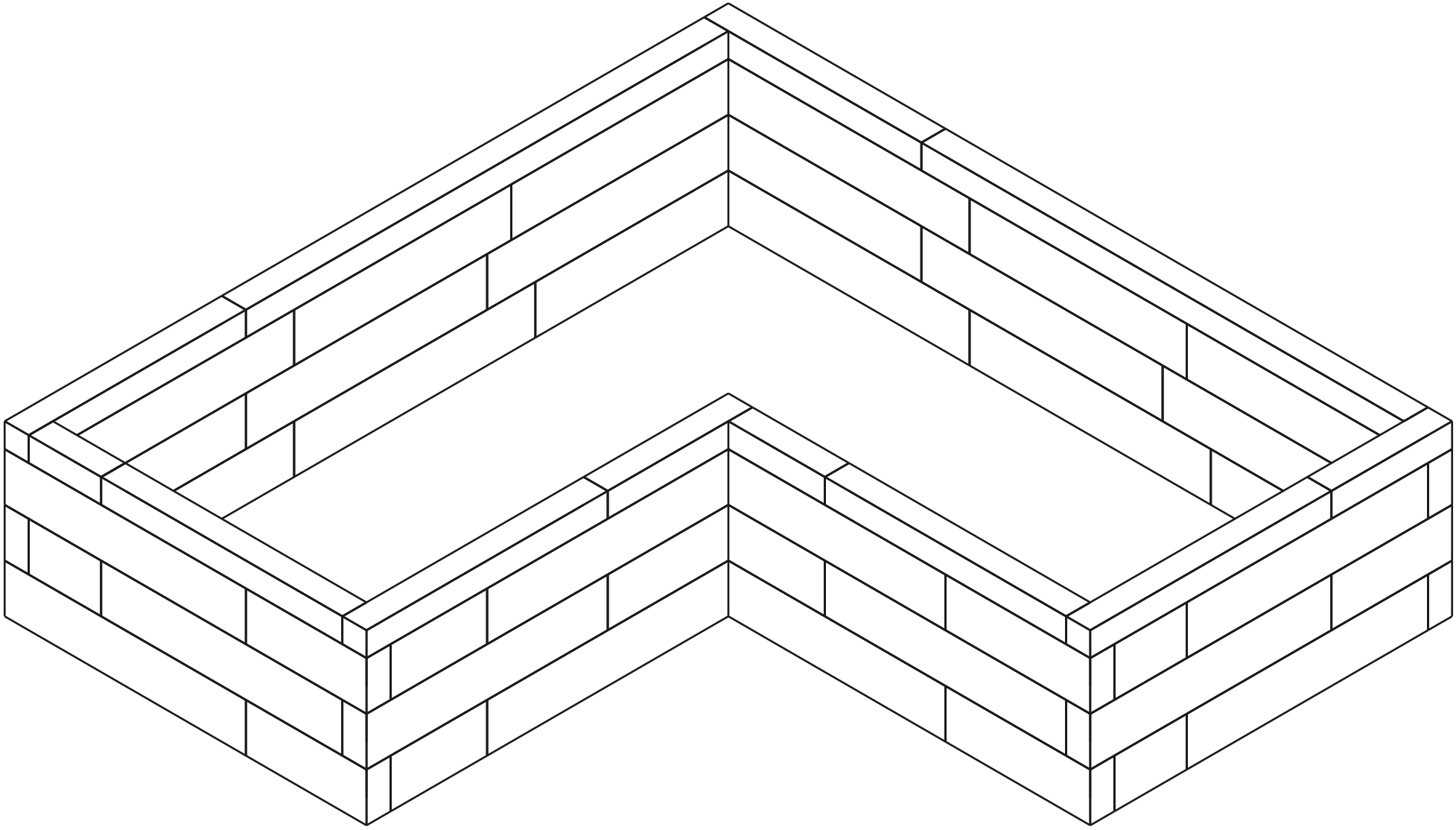

Bill of materials (BOM)

Part	Role	Qty
60×120×600 mm (BOTTOM)	bottom	8
60×120×540 mm (BOTTOM)	bottom	2
60×120×360 mm (BOTTOM)	bottom	1
60×120×300 mm (BOTTOM)	bottom	1
60×120×240 mm (BOTTOM)	bottom	1
60×120×180 mm (BOTTOM)	bottom	1
60×120×600 mm	middle	16
60×120×540 mm	middle	4
60×120×360 mm	middle	2
60×120×300 mm	middle	2
60×120×240 mm	middle	2
60×120×180 mm	middle	2
60×60×1200 mm (TOP)	top	2
60×60×600 mm (TOP)	top	4
60×60×540 mm (TOP)	top	2
60×60×360 mm (TOP)	top	1
60×60×300 mm (TOP)	top	1
60×60×240 mm (TOP)	top	1
60×60×180 mm (TOP)	top	1
Connector (12×70 mm pin)	-	144

Total: 54 parts