Assembly guide

Vyvýšený záhon I-tvar Premium – M - GridGarden

PARTS LIST

no.	size (mm)	drawing	holes	qty
5	60 x 120 x 180	• ○ •	3× Ø12	**4**
4	60 x 120 x 300	• ○ ○ ○ •	5× Ø12	**2**
4	60 x 60 x 300	• ○ ○ ○ •	5× Ø12	**2**
3	60 x 120 x 480	• ○ ○ ○ ○ ○ ○ •	8× Ø12	**2**
3	60 x 60 x 480	• ○ ○ ○ ○ ○ ○ •	8× Ø12	**2**
2	60 x 120 x 600	• ○ ○ ○ ○ ○ ○ ○ ○ •	10× Ø12	**22**
2	60 x 60 x 600	• ○ ○ ○ ○ ○ ○ ○ ○ •	10× Ø12	**2**
1	60 x 60 x 1200	• ○ ○ ○ ○ ○ ○ ○ ○ ○ ○ ○ ○ ○ ○ ○ ○ ○ •	20× Ø12	**2**
	Connectors	●		**94**

38 parts + 94 dowels in total.

Parts are numbered by length (longest = 1).

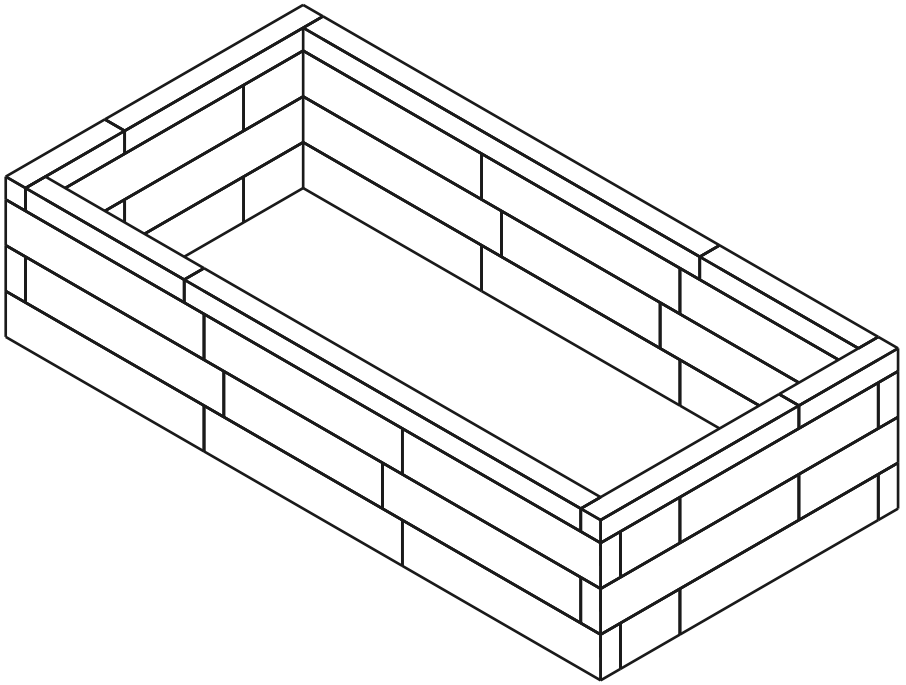

38	**4**	**94**
PARTS	COURSES	DOWELS

Course 1 / 4

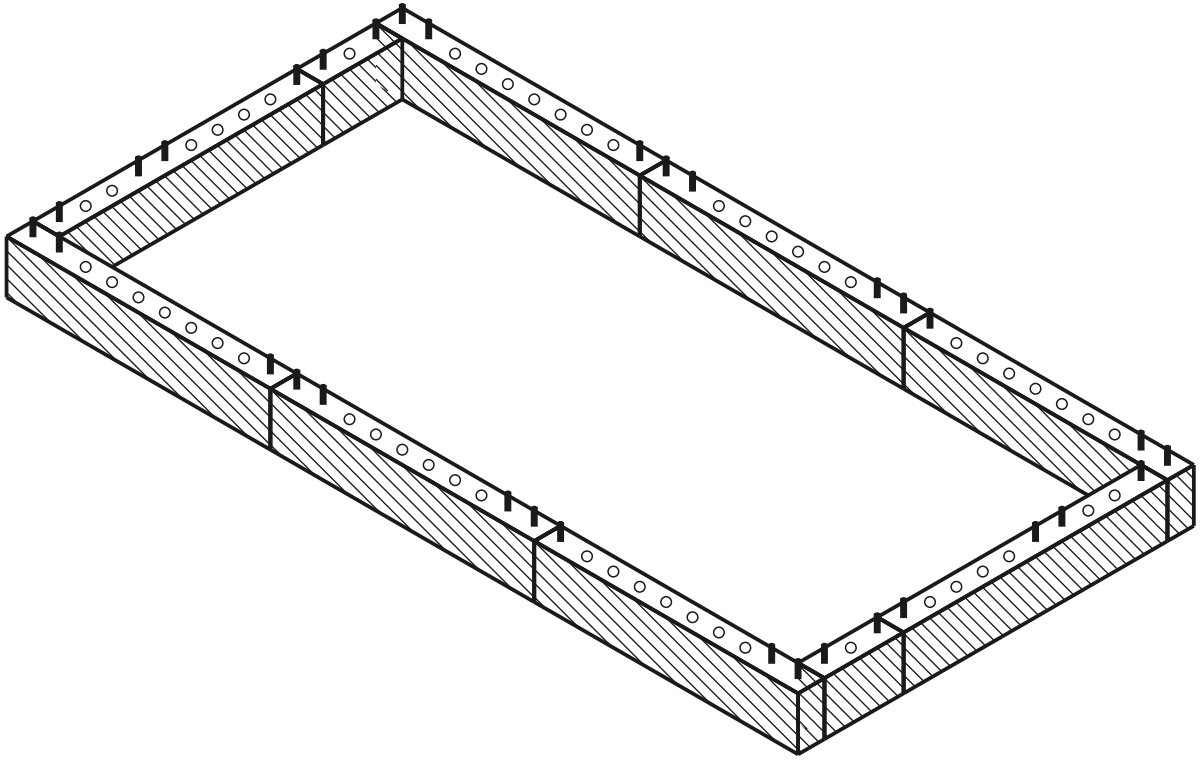

current course built dowel hole

TOP VIEW - WHICH PART GOES WHERE

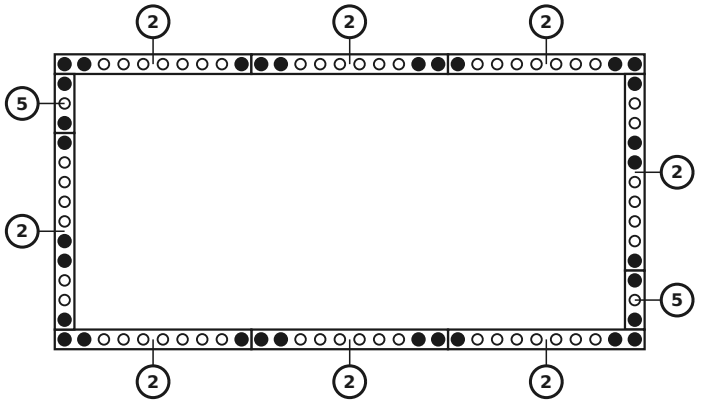

PARTS IN THIS COURSE

no.	size (mm)	drawing	holes	qty
5	60 x 120 x 180		3× Ø12	**2**
2	60 x 120 x 600		10× Ø12	**8**
	Connectors			**32**

Course 2 / 4

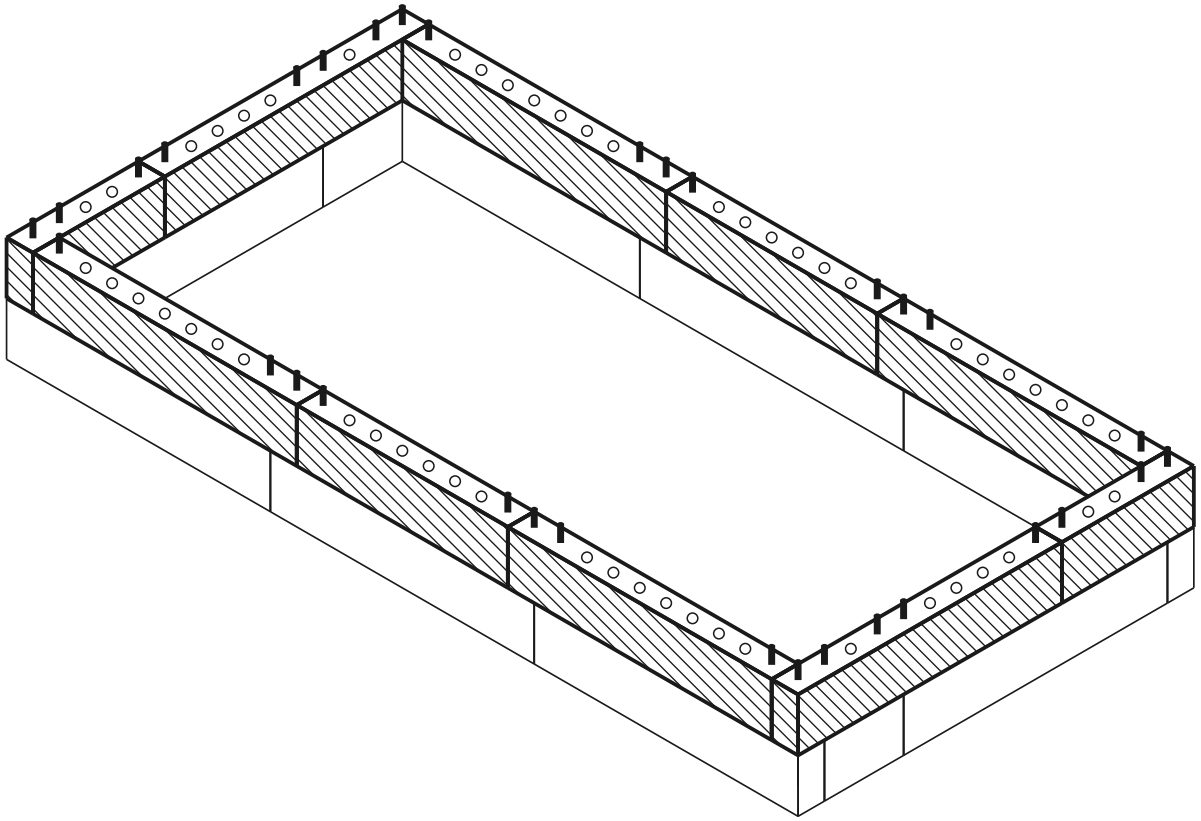

current course built dowel hole

TOP VIEW - WHICH PART GOES WHERE

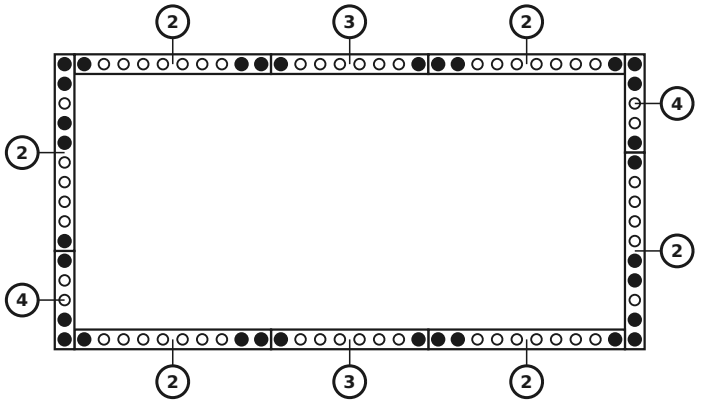

PARTS IN THIS COURSE

no.	size (mm)	drawing	holes	qty
4	60 x 120 x 300		5× Ø12	**2**
3	60 x 120 x 480		8× Ø12	**2**
2	60 x 120 x 600		10× Ø12	**6**
	Connectors	●		**32**

Course 3 / 4

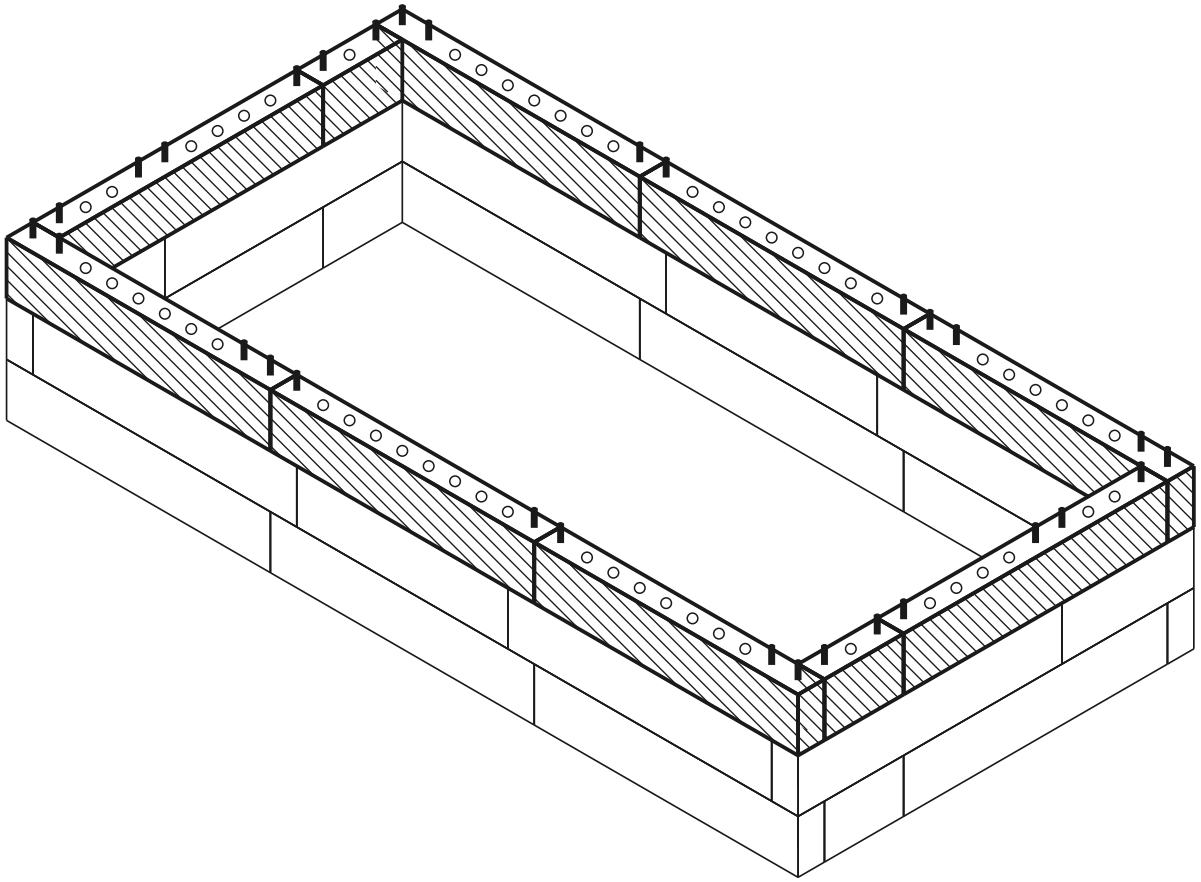

current course built dowel hole

TOP VIEW - WHICH PART GOES WHERE

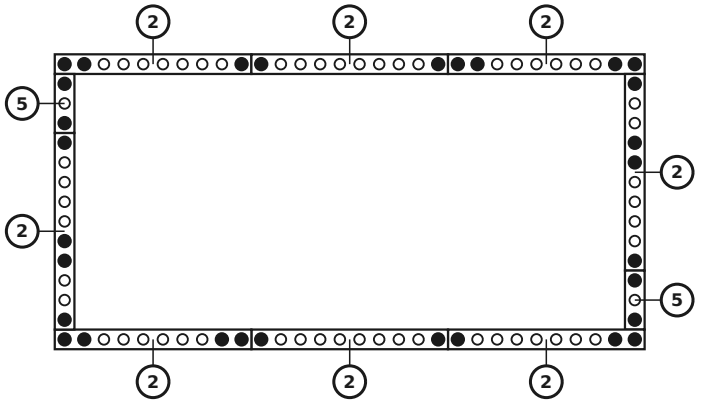

PARTS IN THIS COURSE

no.	size (mm)	drawing	holes	qty
5	60 x 120 x 180		3× Ø12	2
2	60 x 120 x 600		10× Ø12	8
	Connectors			30

Course 4 / 4 (top cap)

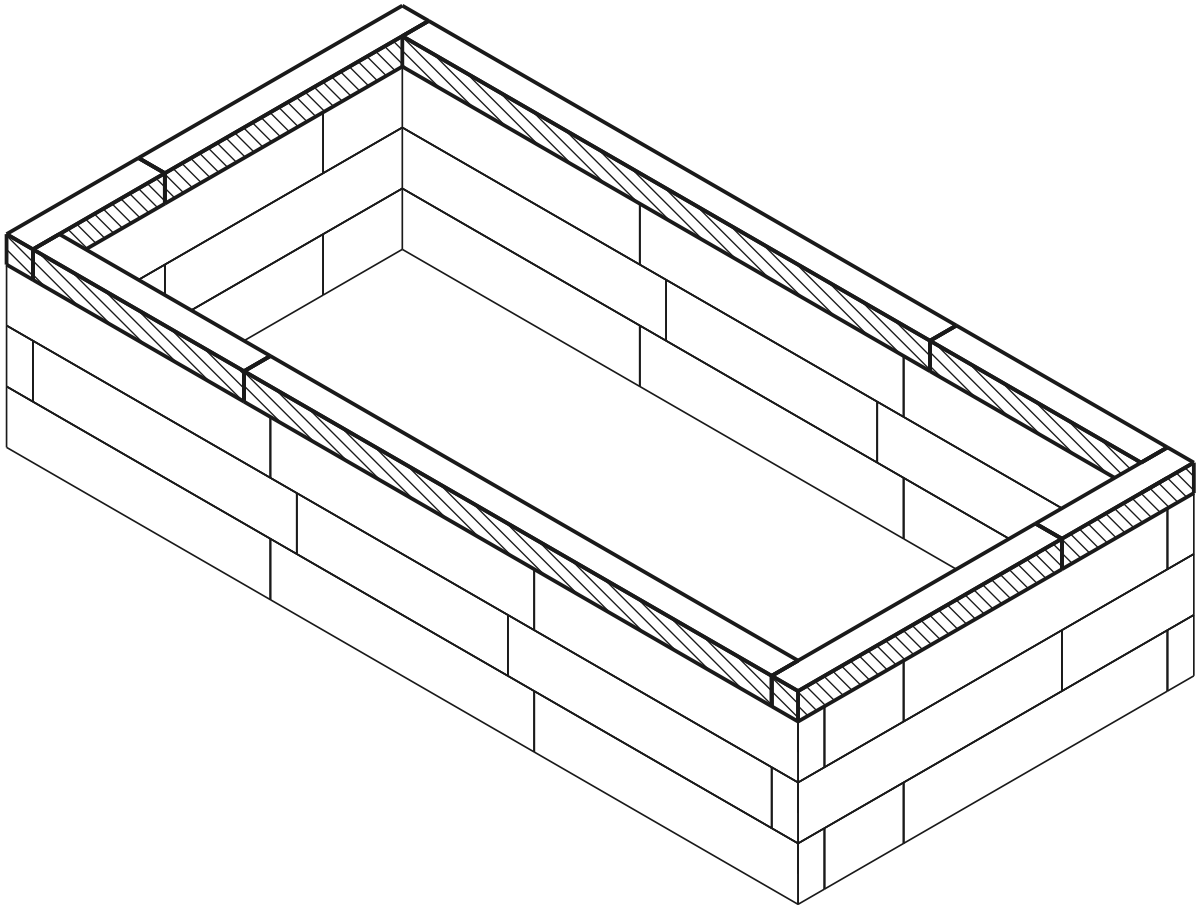

current course built dowel hole

TOP VIEW - WHICH PART GOES WHERE

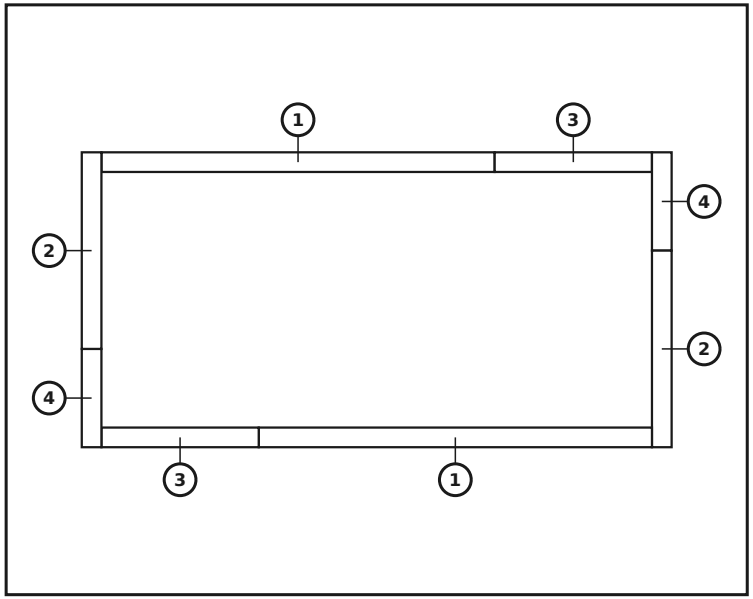

PARTS IN THIS COURSE

no.	size (mm)	drawing	holes	qty
4	60 x 60 x 300		5× Ø12	**2**
3	60 x 60 x 480		8× Ø12	**2**
2	60 x 60 x 600		10× Ø12	**2**
1	60 x 60 x 1200		20× Ø12	**2**
	Connectors	●		**0**

Finished model

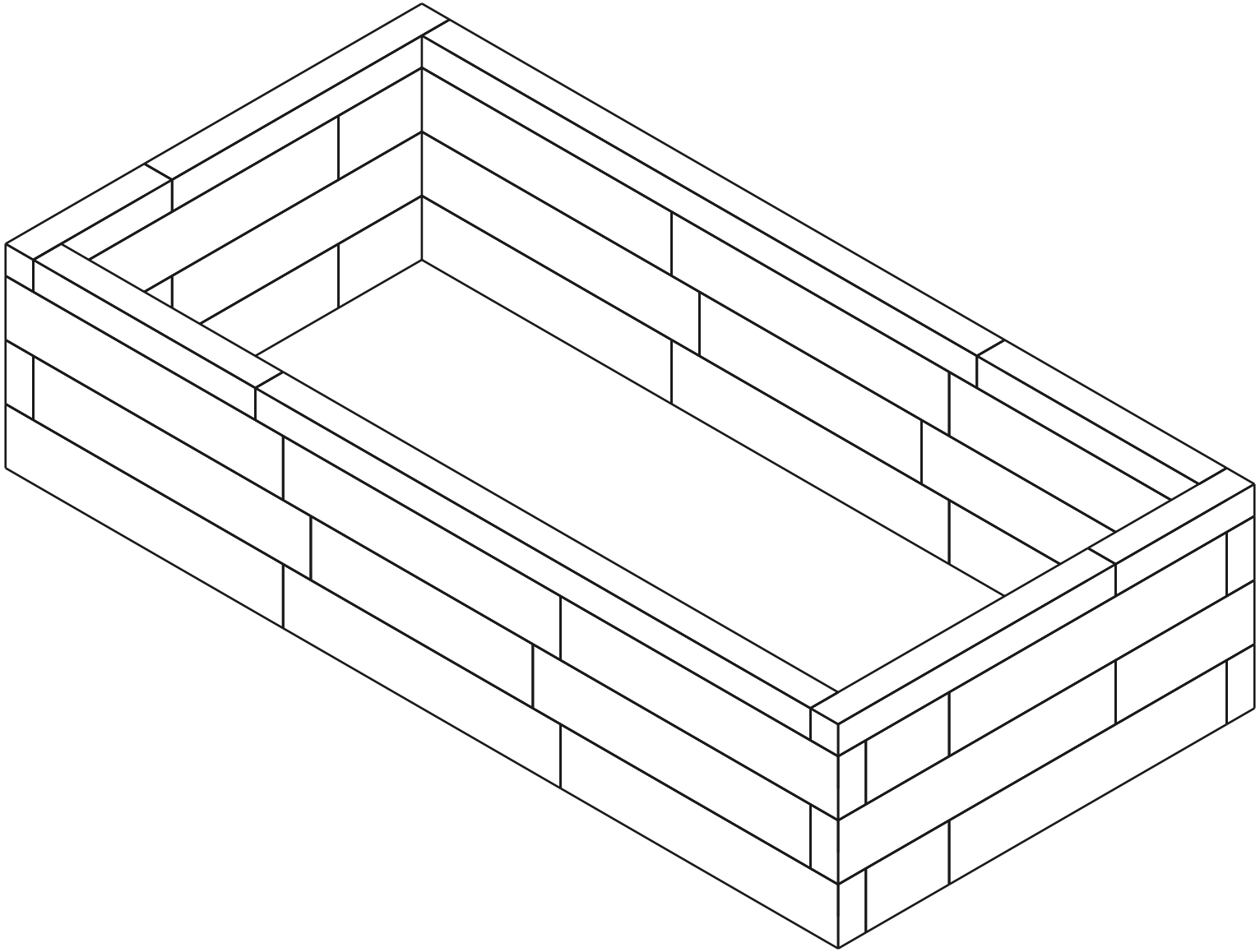

Bill of materials (BOM)

Part	Role	Qty
60×120×600 mm (BOTTOM)	bottom	8
60×120×180 mm (BOTTOM)	bottom	2
60×120×600 mm	middle	14
60×120×480 mm	middle	2
60×120×300 mm	middle	2
60×120×180 mm	middle	2
60×60×1200 mm (TOP)	top	2
60×60×600 mm (TOP)	top	2
60×60×480 mm (TOP)	top	2
60×60×300 mm (TOP)	top	2
Connector (12×70 mm pin)	-	94

Total: 38 parts