Assembly guide

Modular Larch Garden Stairs — Brick Premium - GridGarden

PARTS LIST

no.	size (mm)	drawing	holes	qty
②	60 x 120 x 300		5× Ø12	**4**
②	60 x 60 x 300		5× Ø12	**4**
①	60 x 120 x 600		10× Ø12	**14**
	60 x 120 x 1200	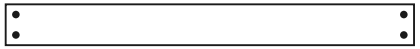	4× Ø12	**12**
	Connectors	●		**84**

34 parts + 84 dowels in total.

Parts are numbered by length (longest = 1).

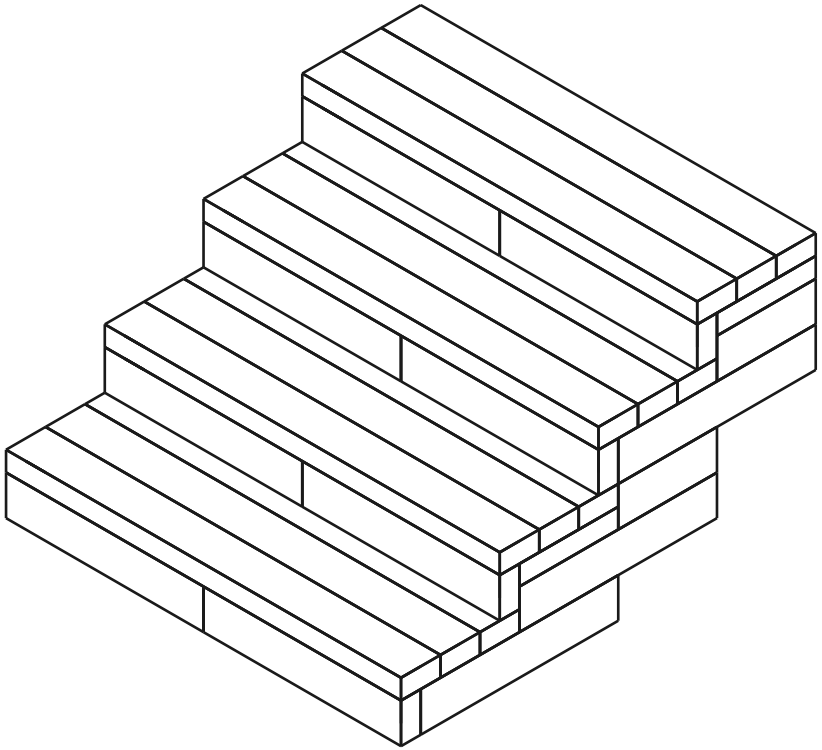

34	**13**	**84**
PARTS	COURSES	DOWELS

Course 1 / 13 (sunk 60 mm below ground level)

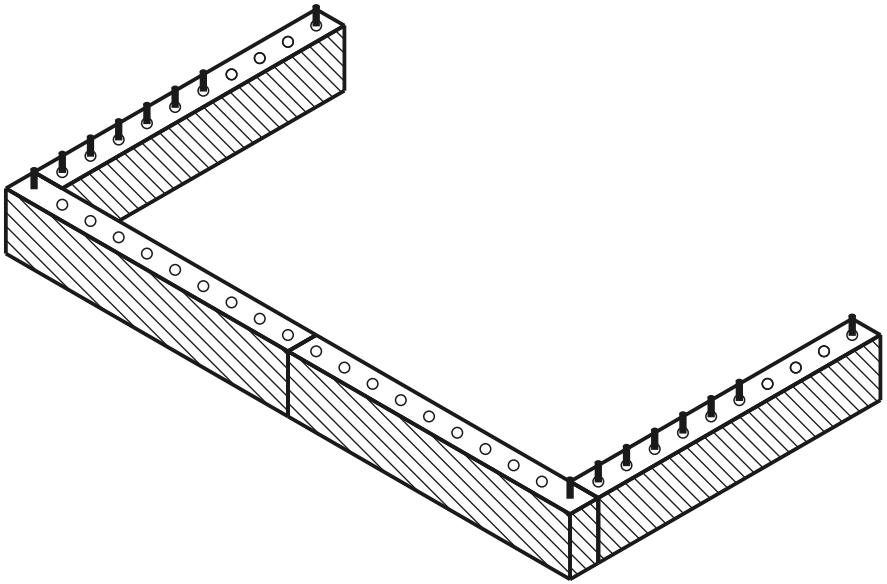

current course built dowel hole

TOP VIEW - WHICH PART GOES WHERE

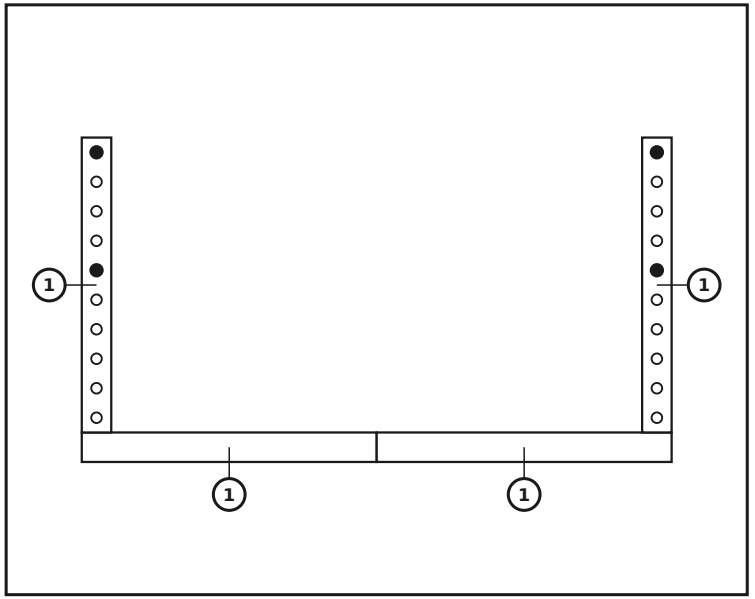

PARTS IN THIS COURSE

no.	size (mm)	drawing	holes	qty
1	60 x 120 x 600		10× Ø12	**4**
	Connectors			**4**

Course 2 / 13 — Fitting the bench seat

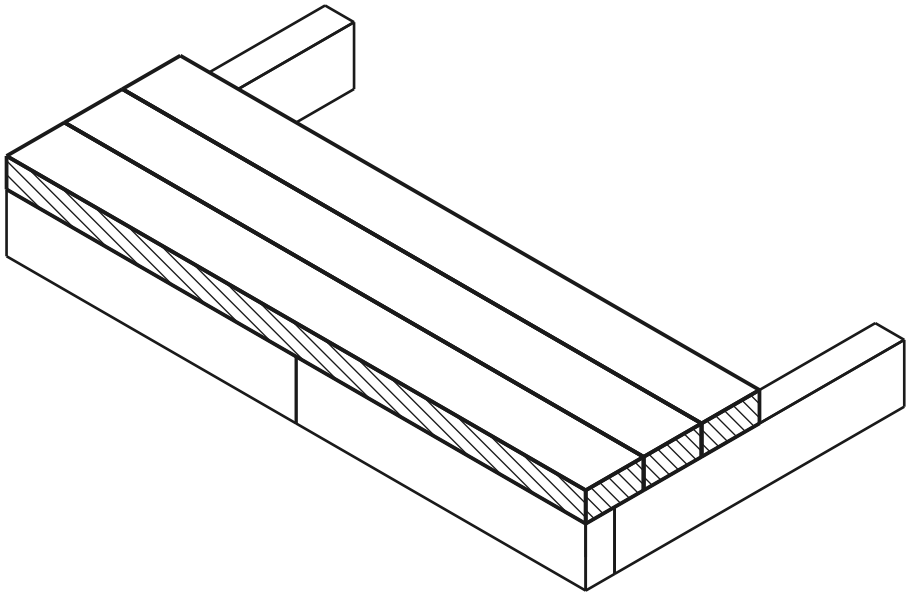

current course built dowel hole

TOP VIEW - WHICH PART GOES WHERE

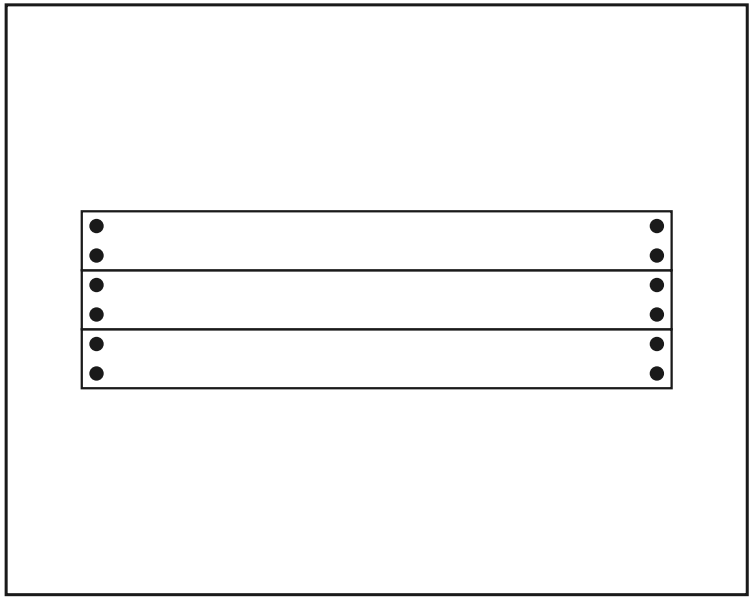

PARTS IN THIS COURSE

size (mm)	drawing	holes	qty
60 x 120 x 1200		4× Ø12	**3**
Connectors			**12**

Tap the connectors into the top course of the wall, then set the seat board onto them from above.

Course 3 / 13

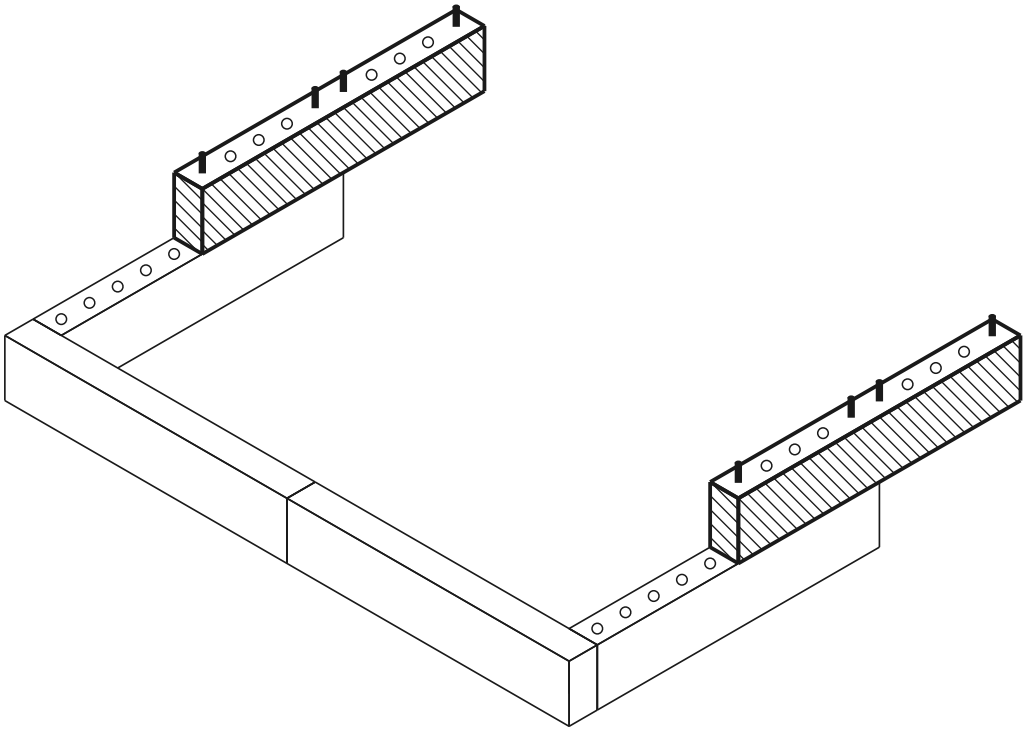

current course built dowel hole

TOP VIEW - WHICH PART GOES WHERE

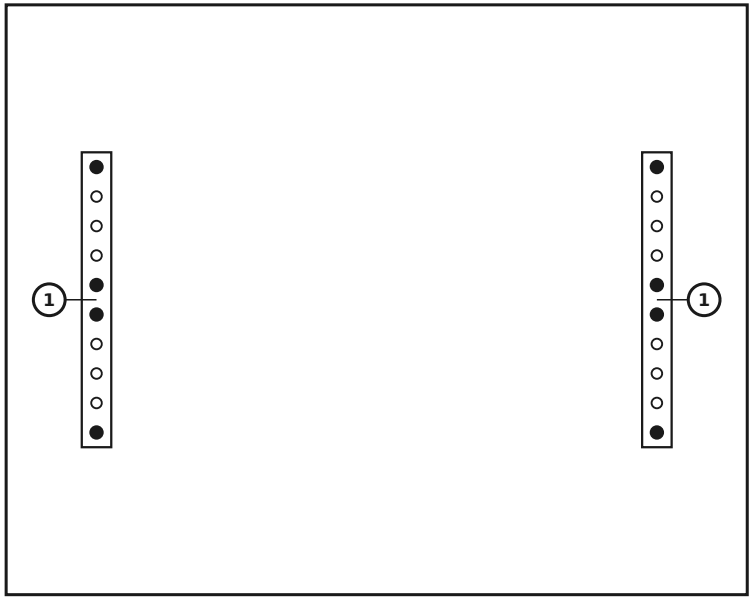

PARTS IN THIS COURSE

no.	size (mm)	drawing	holes	qty
1	60 x 120 x 600		10× Ø12	2
	Connectors			8

Course 4 / 13

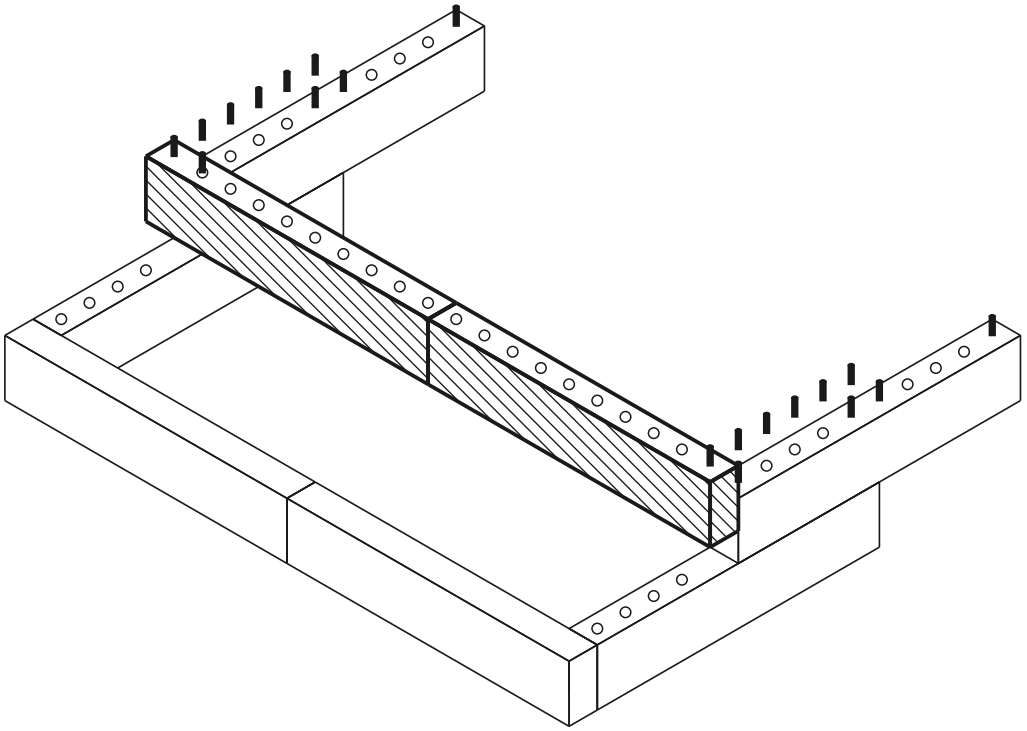

current course built dowel hole

TOP VIEW - WHICH PART GOES WHERE

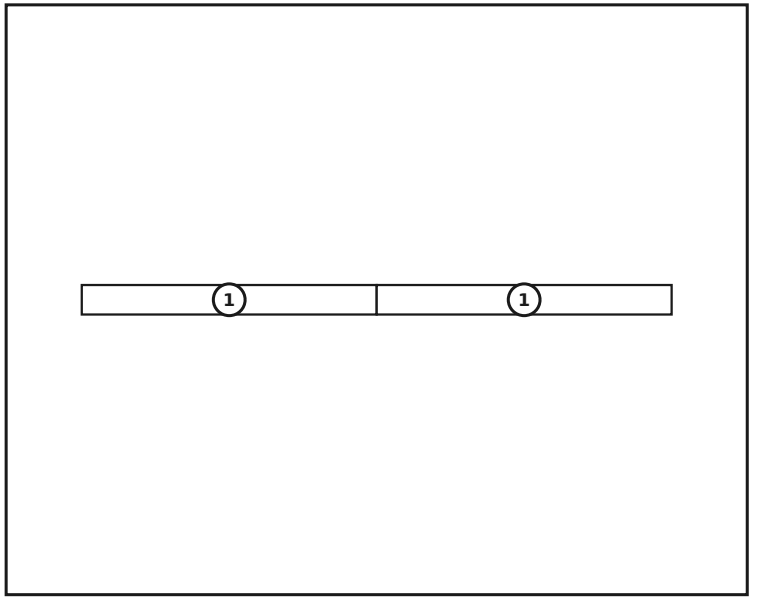

PARTS IN THIS COURSE

no.	size (mm)	drawing	holes	qty
1	60 x 120 x 600		10× Ø12	**2**
	Connectors			**0**

Course 5 / 13

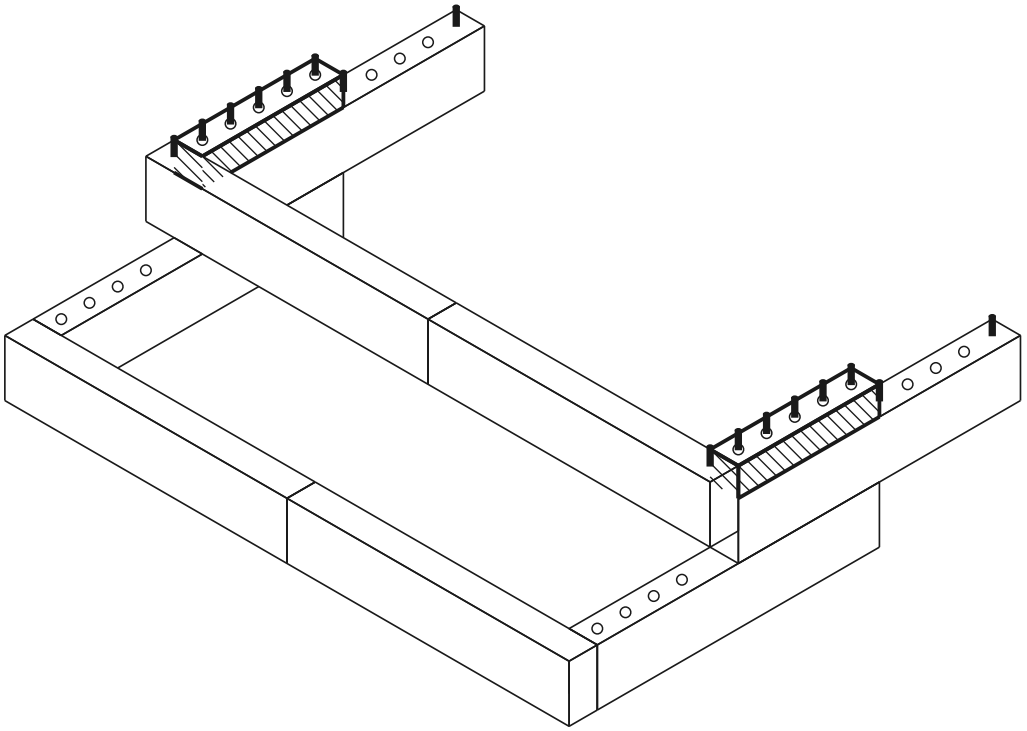

current course built dowel hole

TOP VIEW - WHICH PART GOES WHERE

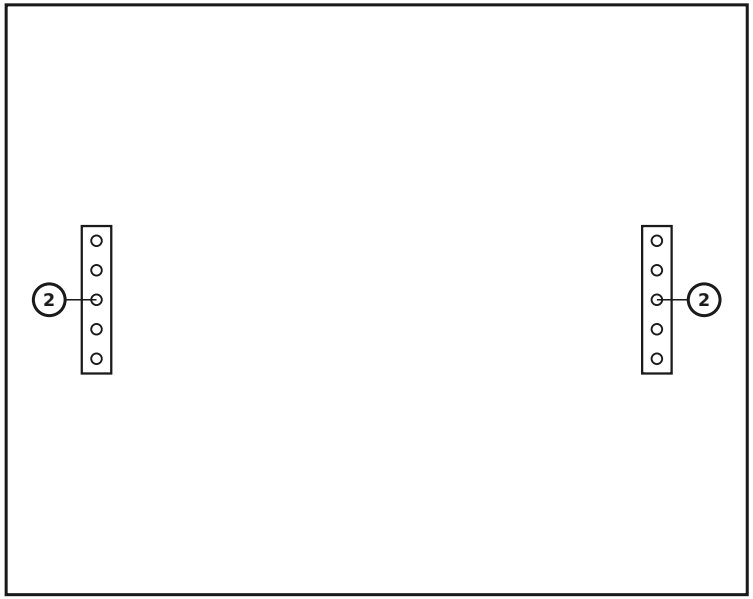

PARTS IN THIS COURSE

no.	size (mm)	drawing	holes	qty
2	60 x 60 x 300	• ○ ○ ○ •	5× Ø12	**2**
	Connectors	●		**0**

Course 6 / 13

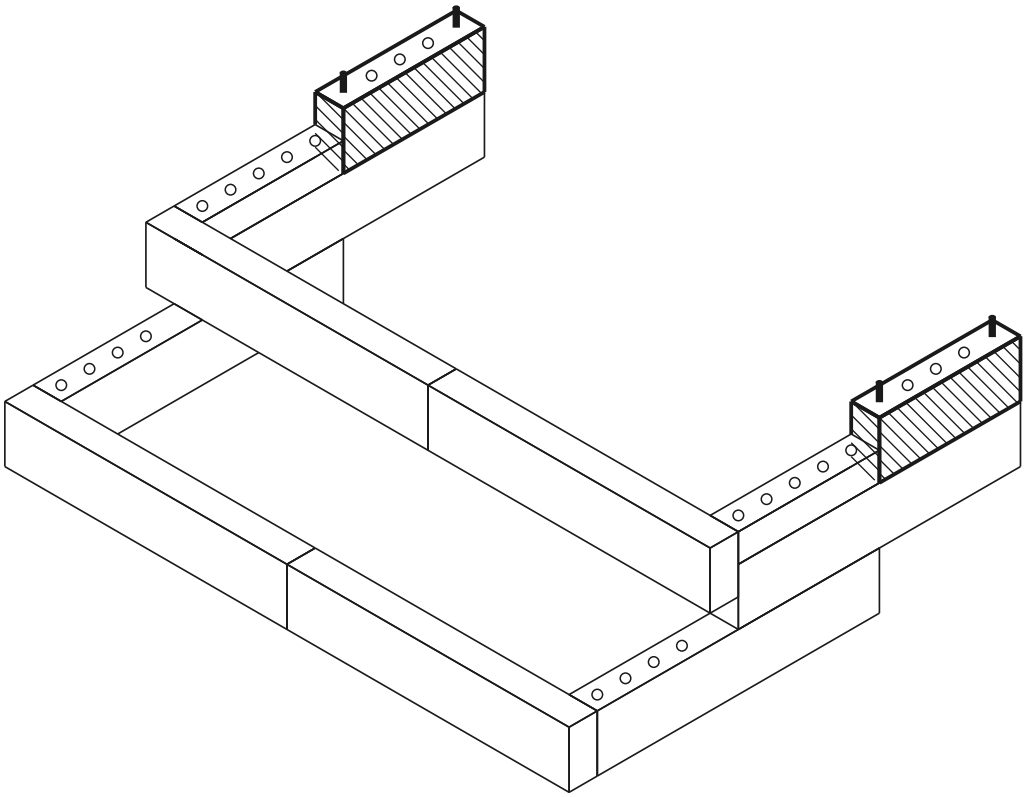

current course built dowel hole

TOP VIEW - WHICH PART GOES WHERE

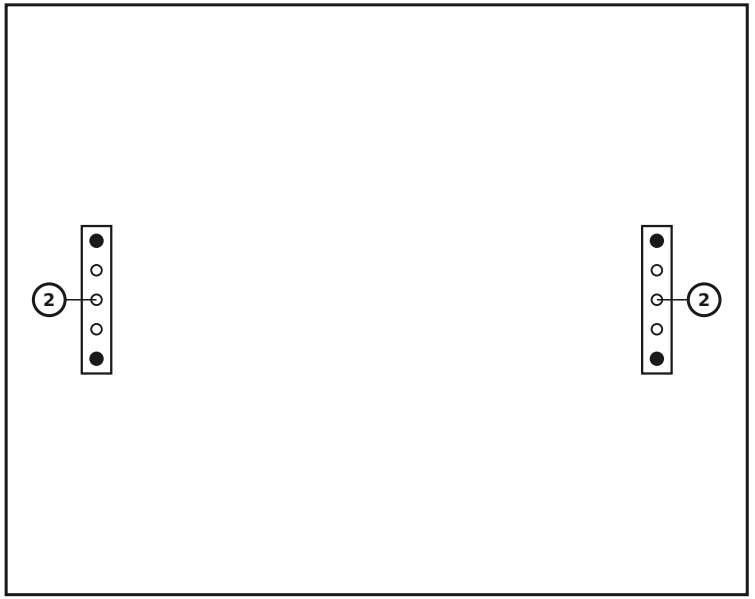

PARTS IN THIS COURSE

no.	size (mm)	drawing	holes	qty
2	60 x 120 x 300	• ○ ○ ○ •	5× Ø12	**2**
	Connectors	●		**4**

Course 7 / 13 — Fitting the bench seat

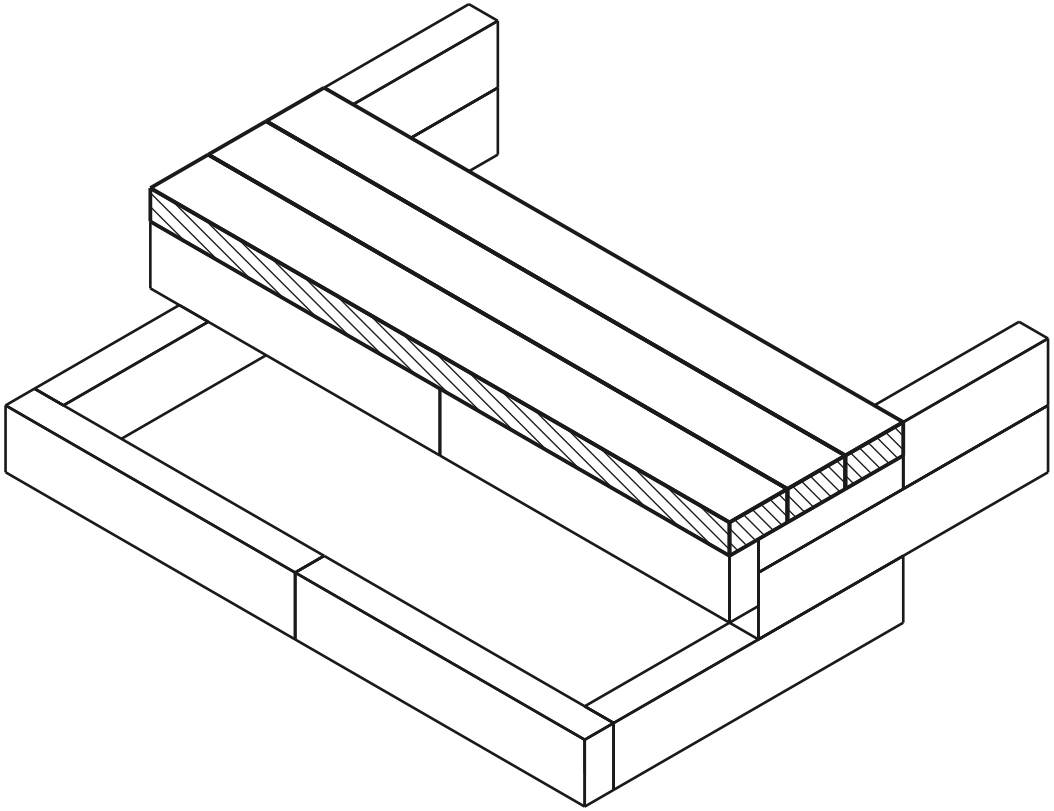

current course built dowel hole

TOP VIEW - WHICH PART GOES WHERE

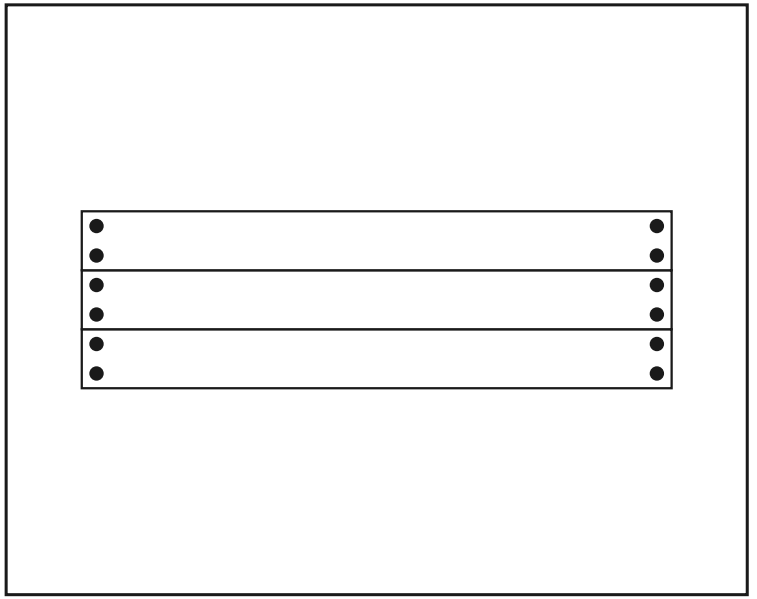

PARTS IN THIS COURSE

size (mm)	drawing	holes	qty
60 x 120 x 1200	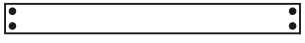	4× Ø12	**3**
Connectors	●		**12**

Tap the connectors into the top course of the wall, then set the seat board onto them from above.

Course 8 / 13

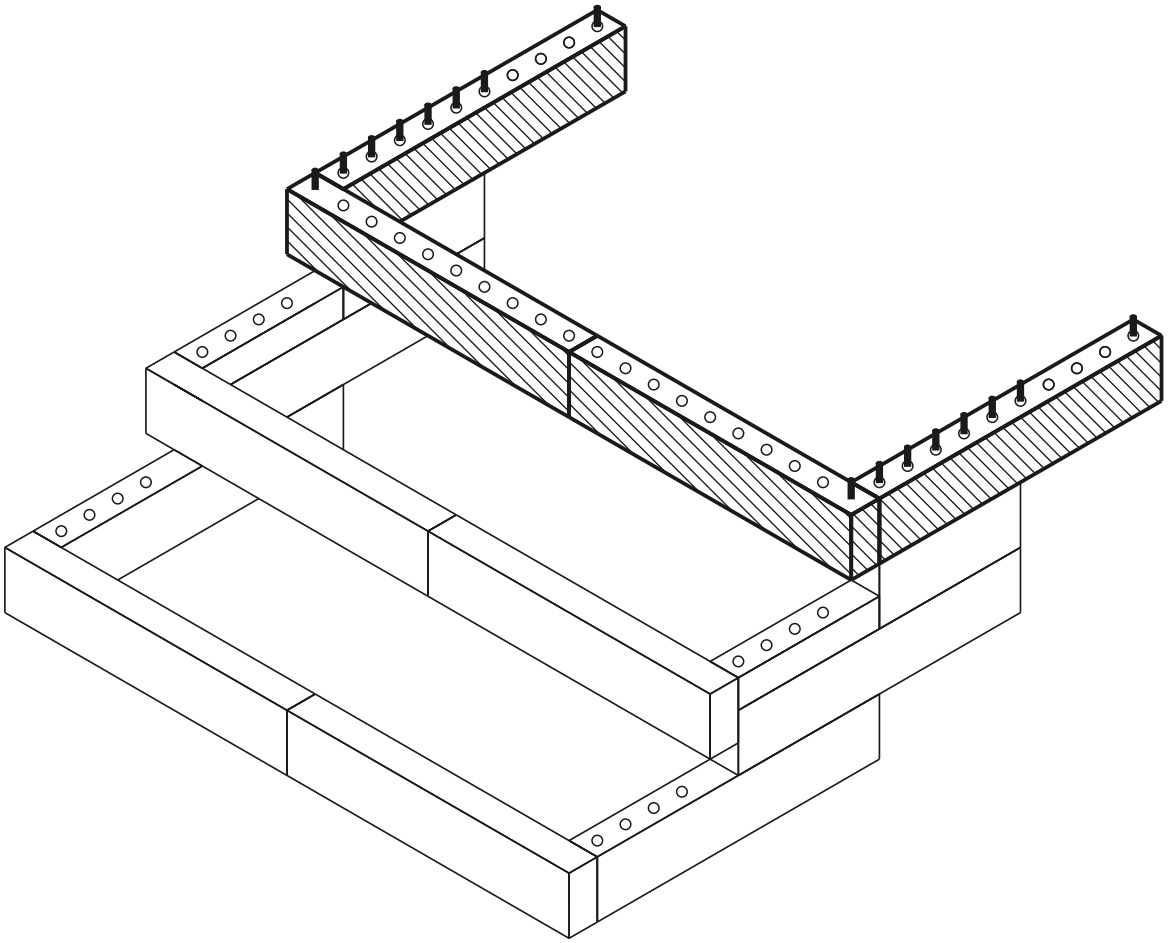

current course built dowel hole

TOP VIEW - WHICH PART GOES WHERE

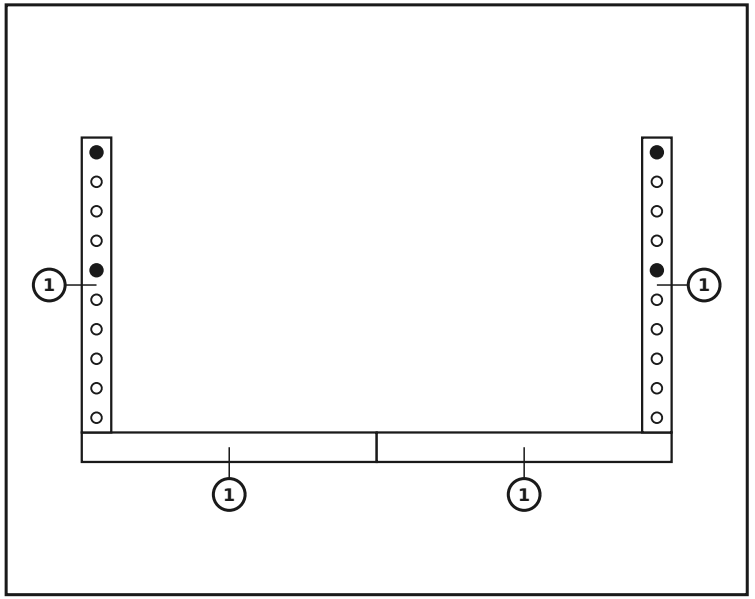

PARTS IN THIS COURSE

no.	size (mm)	drawing	holes	qty
1	60 x 120 x 600		10× Ø12	4
	Connectors			4

Course 9 / 13 — Fitting the bench seat

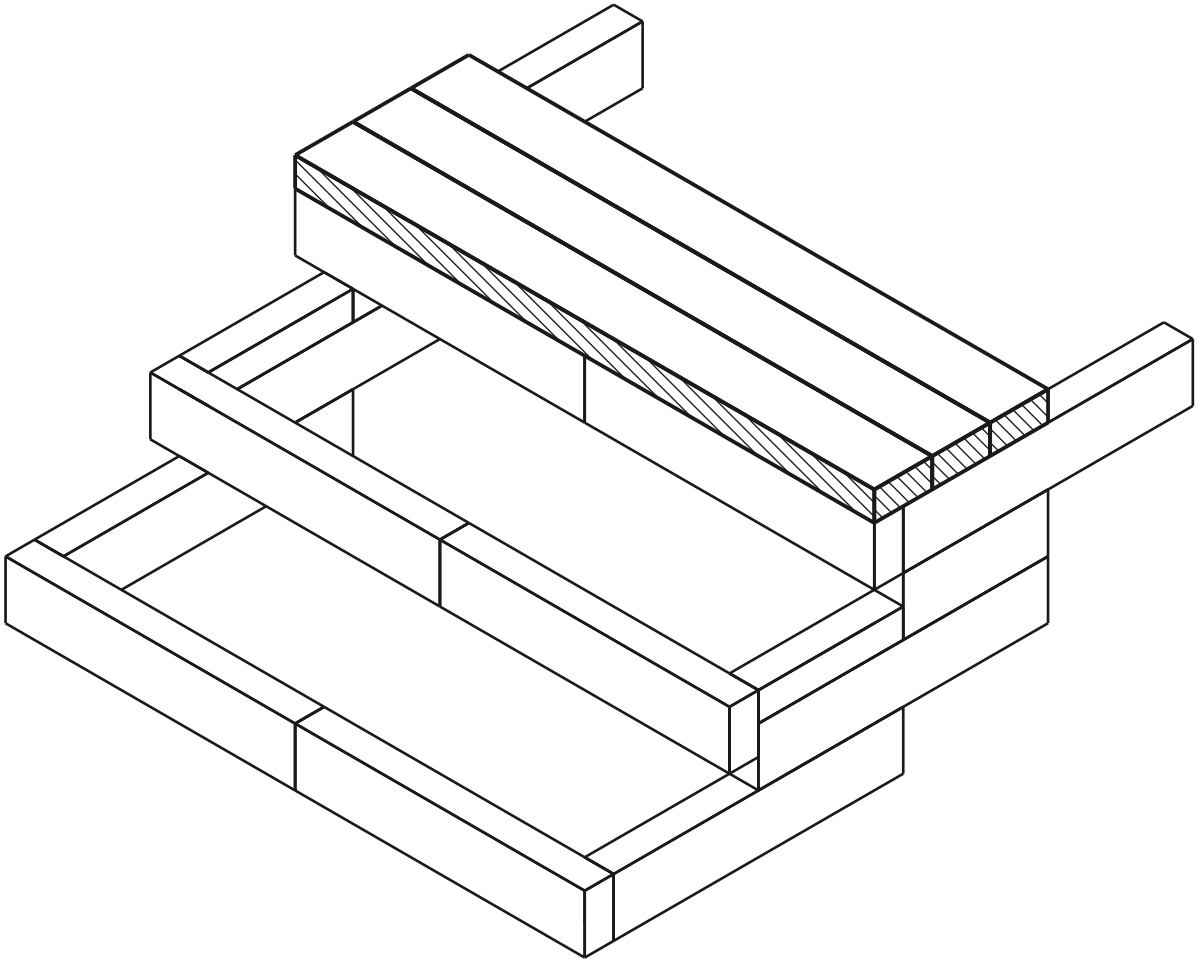

current course built dowel hole

TOP VIEW - WHICH PART GOES WHERE

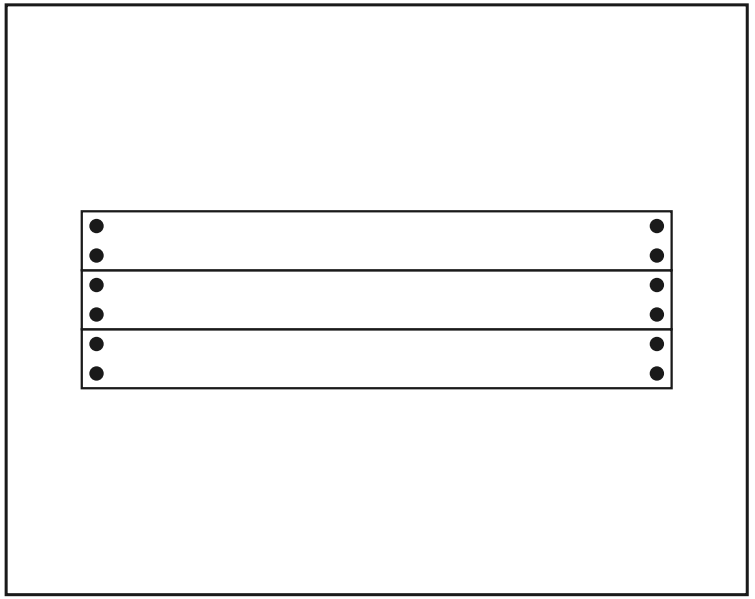

PARTS IN THIS COURSE

size (mm)	drawing	holes	qty
60 x 120 x 1200	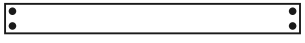	4× Ø12	**3**
Connectors	●		**12**

Tap the connectors into the top course of the wall, then set the seat board onto them from above.

Course 10 / 13

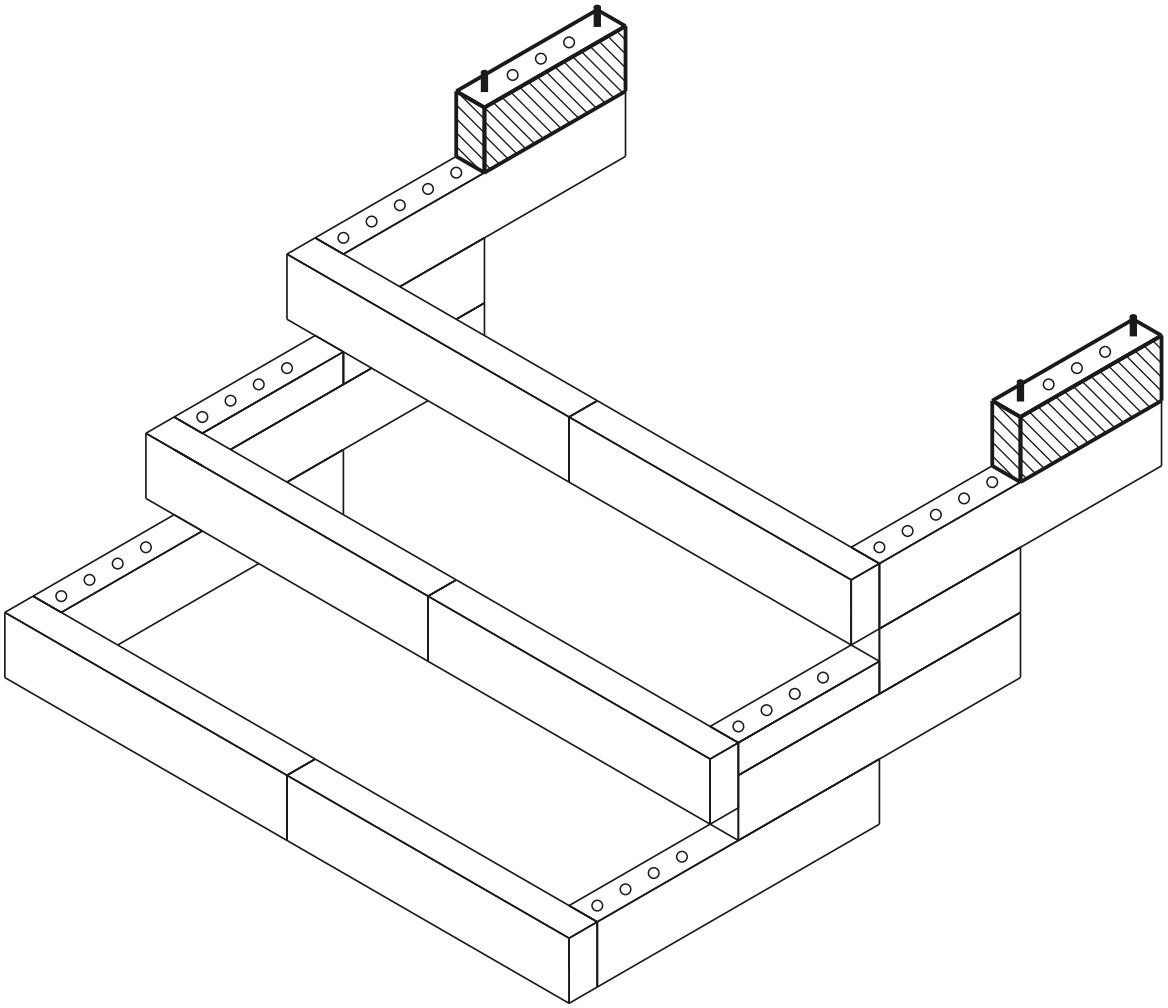

current course built dowel hole

TOP VIEW - WHICH PART GOES WHERE

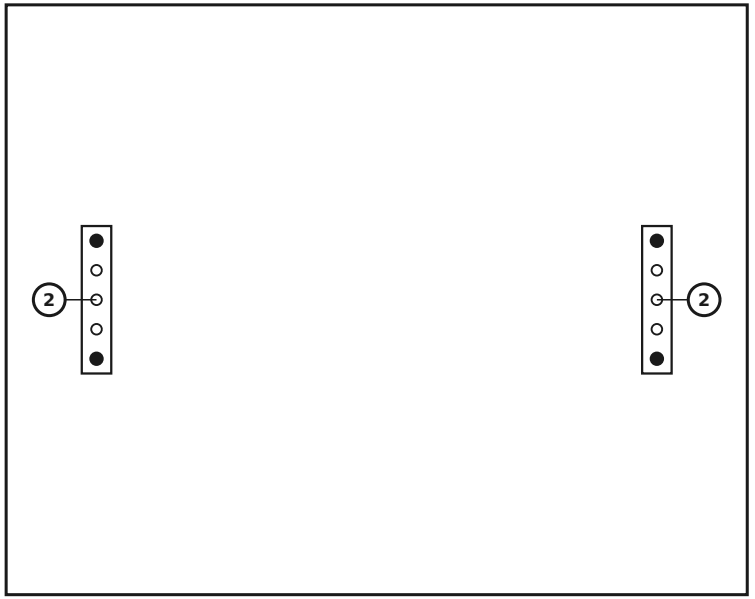

PARTS IN THIS COURSE

no.	size (mm)	drawing	holes	qty
②	60 x 120 x 300	• ○ ○ ○ •	5× Ø12	**2**
	Connectors	●		**4**

Course 11 / 13

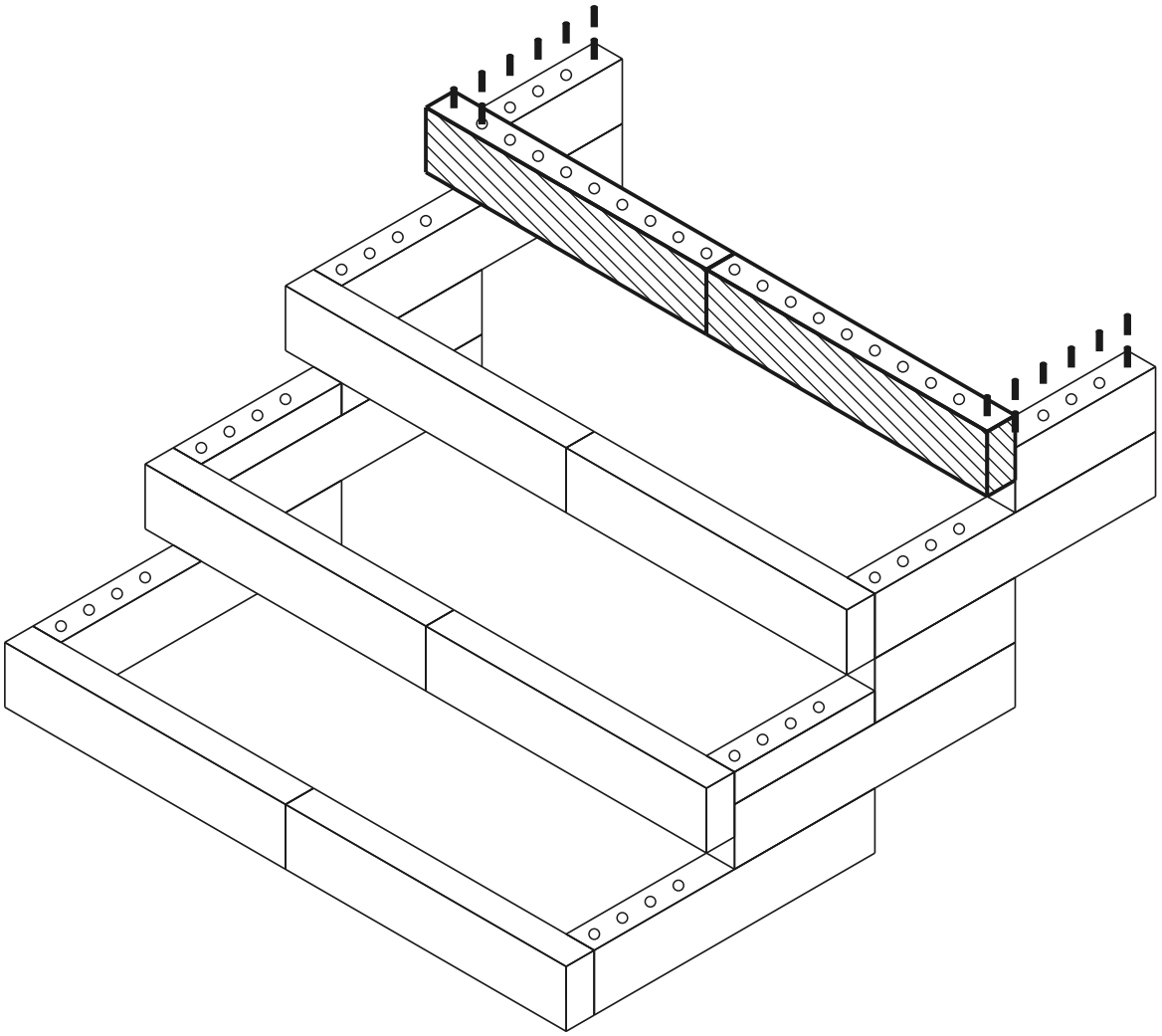

current course built dowel hole

TOP VIEW - WHICH PART GOES WHERE

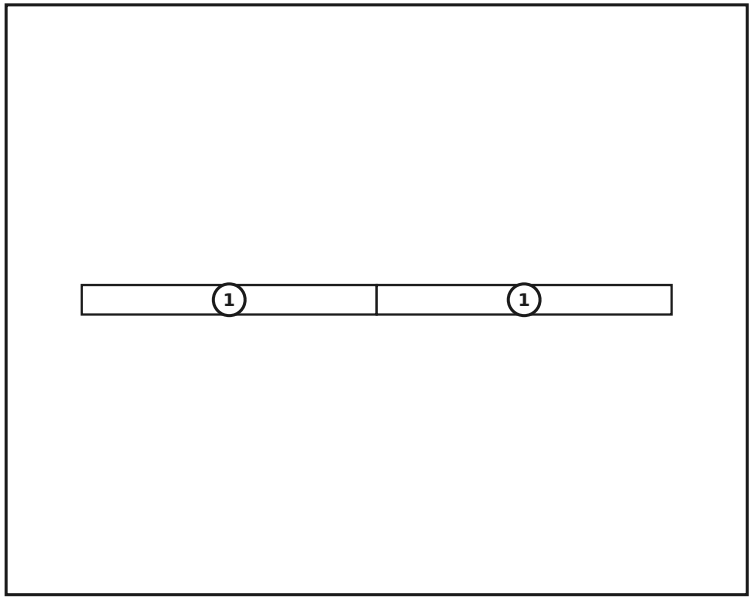

PARTS IN THIS COURSE

no.	size (mm)	drawing	holes	qty
1	60 x 120 x 600		10× Ø12	**2**
	Connectors			**0**

Course 12 / 13

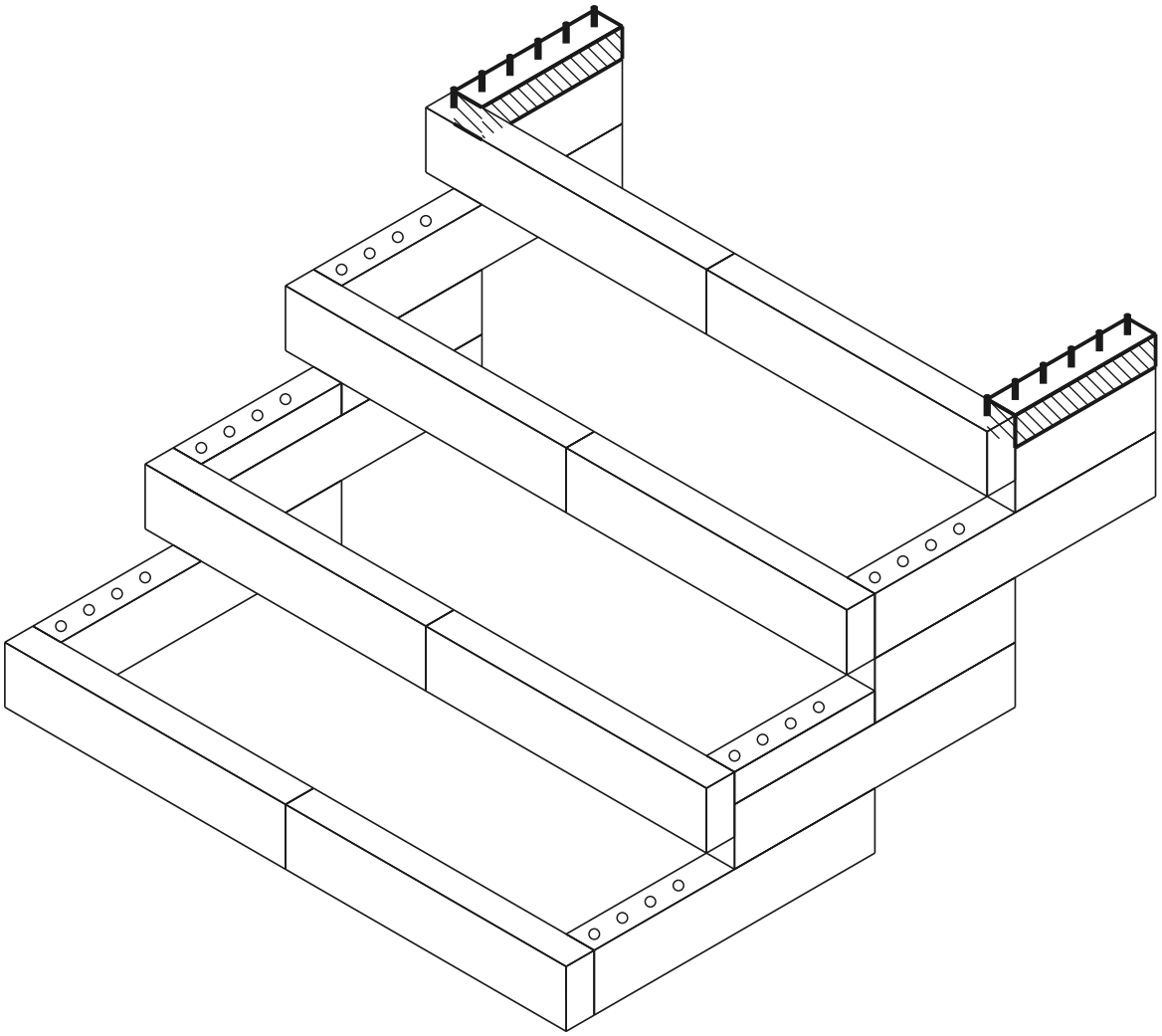

current course built dowel hole

TOP VIEW - WHICH PART GOES WHERE

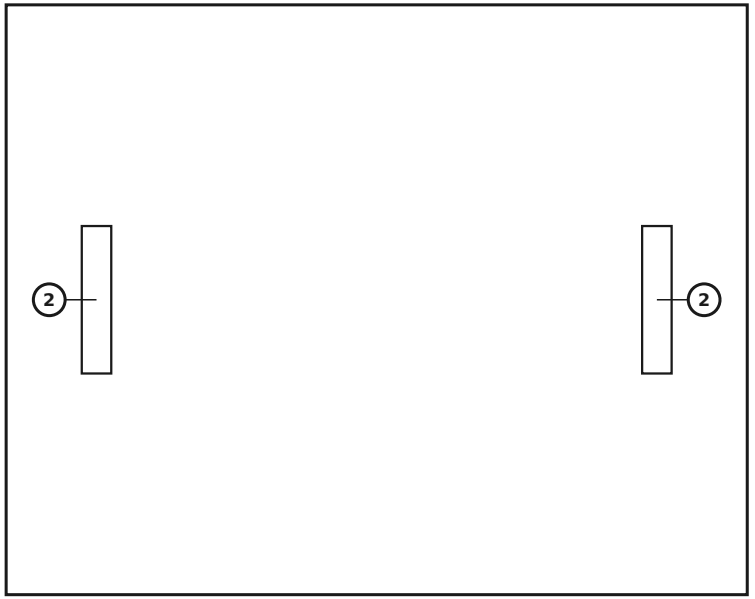

PARTS IN THIS COURSE

no.	size (mm)	drawing	holes	qty
2	60 x 60 x 300	• ○ ○ ○ •	5× Ø12	**2**
	Connectors	●		**0**

Course 13 / 13 — Fitting the bench seat

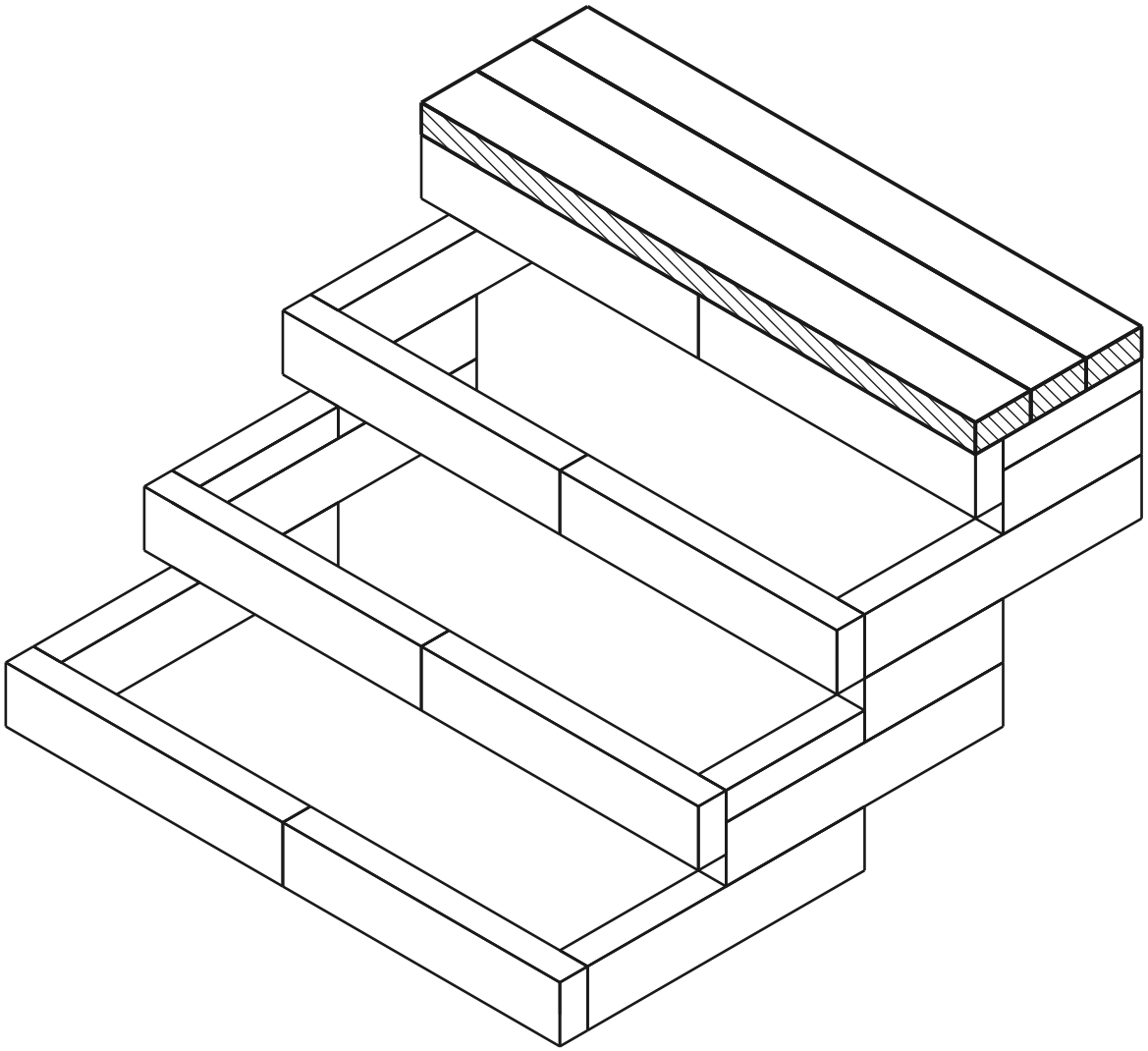

current course built dowel hole

TOP VIEW - WHICH PART GOES WHERE

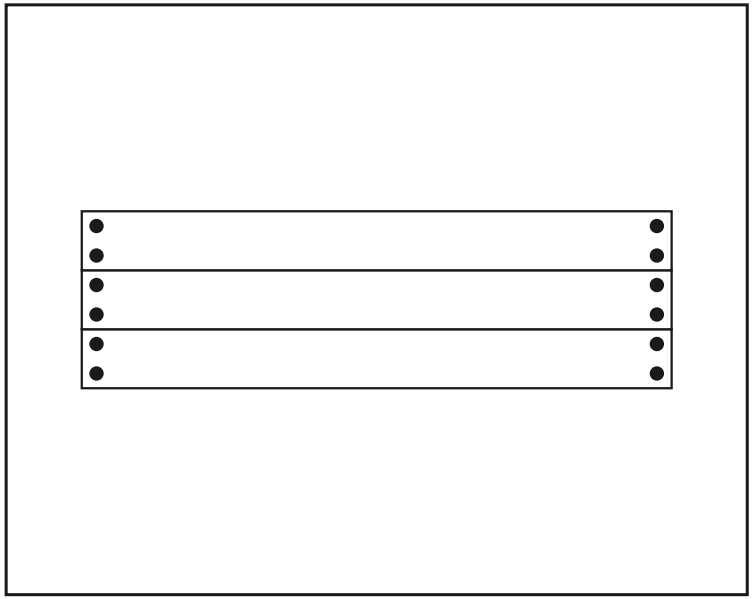

PARTS IN THIS COURSE

size (mm)	drawing	holes	qty
60 x 120 x 1200		4× Ø12	**3**
Connectors			**12**

Tap the connectors into the top course of the wall, then set the seat board onto them from above.

Finished model

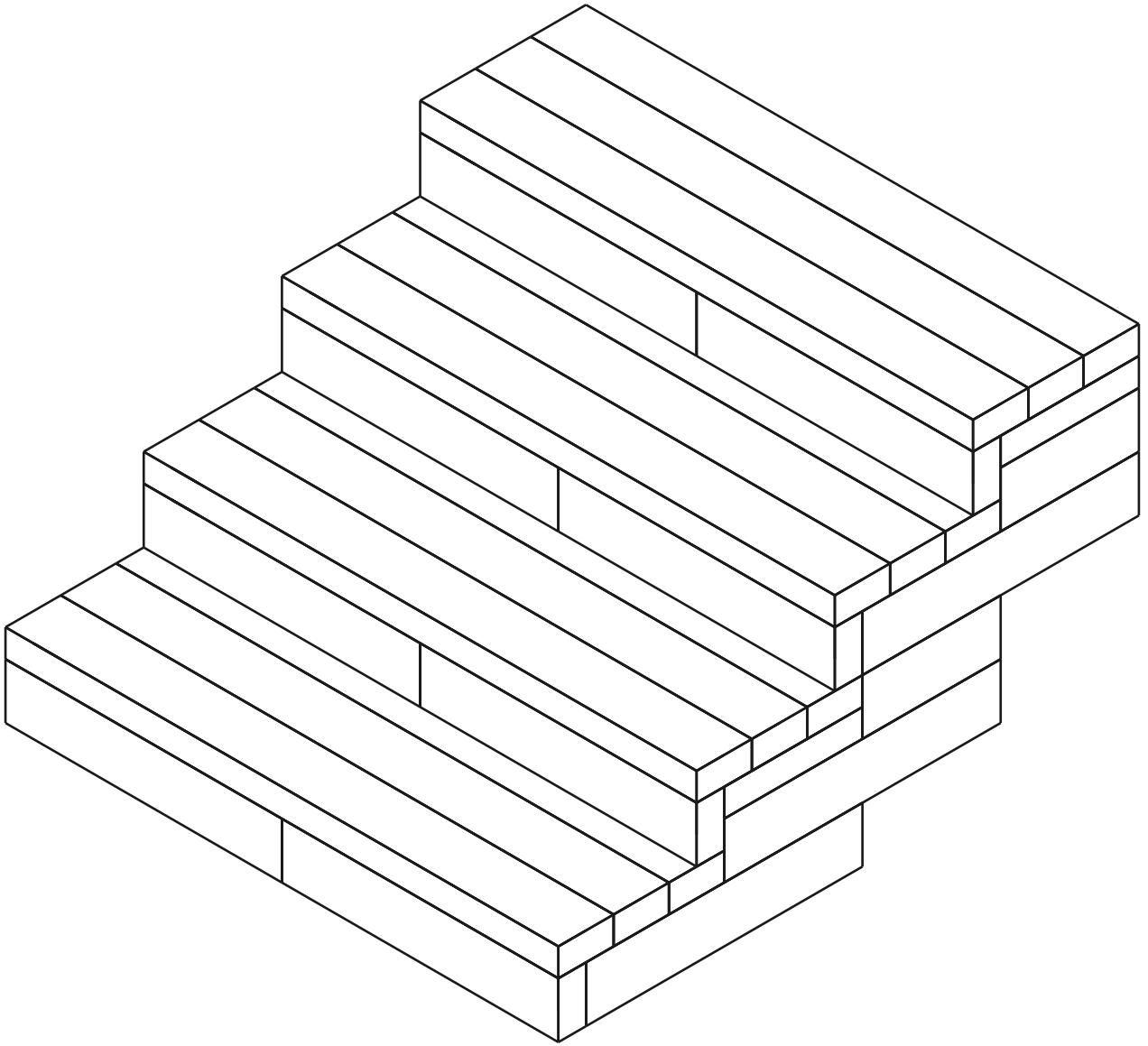

Bill of materials (BOM)

Part	Role	Qty
60×120×600 mm (BOTTOM)	bottom	4
60×120×600 mm	middle	10
60×120×300 mm	middle	4
60×60×300 mm (MID)	middle	4
Bench seat 1200mm	seat	12
Connector (12×70 mm pin)	-	84

Total: 34 parts