Assembly guide

Brick Premium Garden Table on Solid Block Legs - GridGarden

PARTS LIST

no.	size (mm)	drawing	holes	qty
②	60 x 120 x 120		2× Ø12	**24**
①	60 x 120 x 600		10× Ø12	**24**
	60 x 120 x 1200	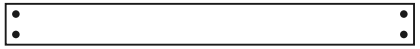	4× Ø12	**6**
	Connectors	●		**124**

54 parts + 124 dowels in total.

Parts are numbered by length (longest = 1).

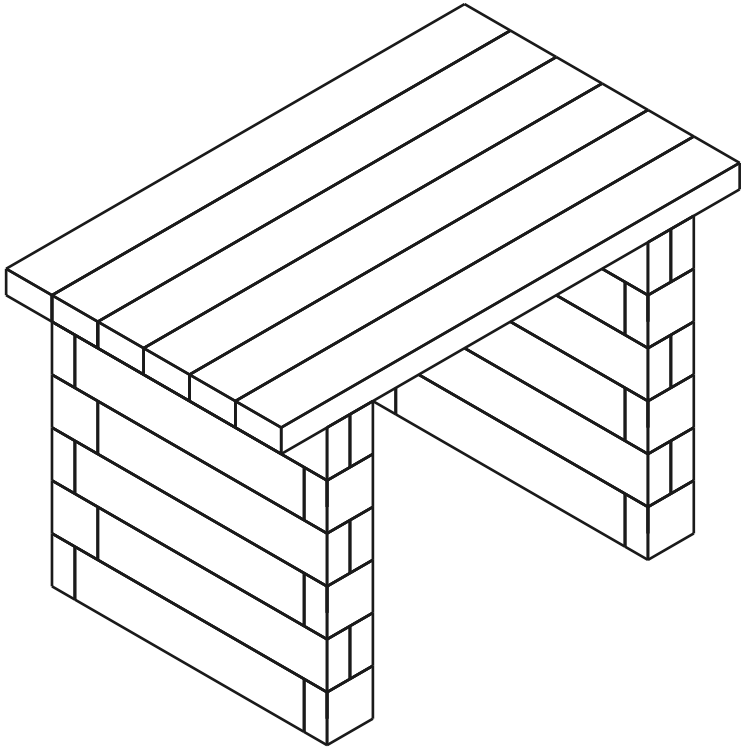

54	**7**	**124**
PARTS	COURSES	DOWELS

Course 1 / 7

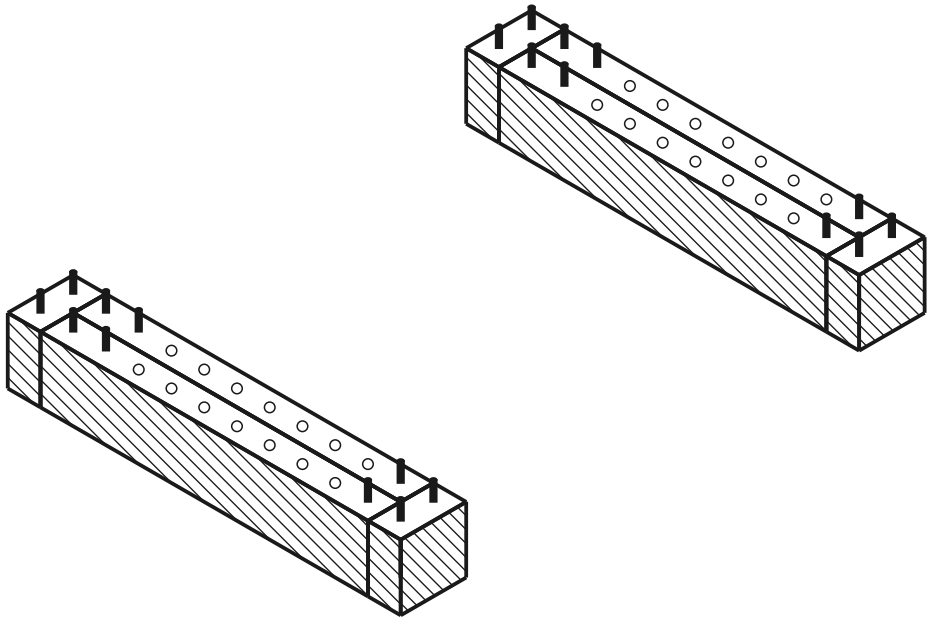

current course built dowel hole

TOP VIEW - WHICH PART GOES WHERE

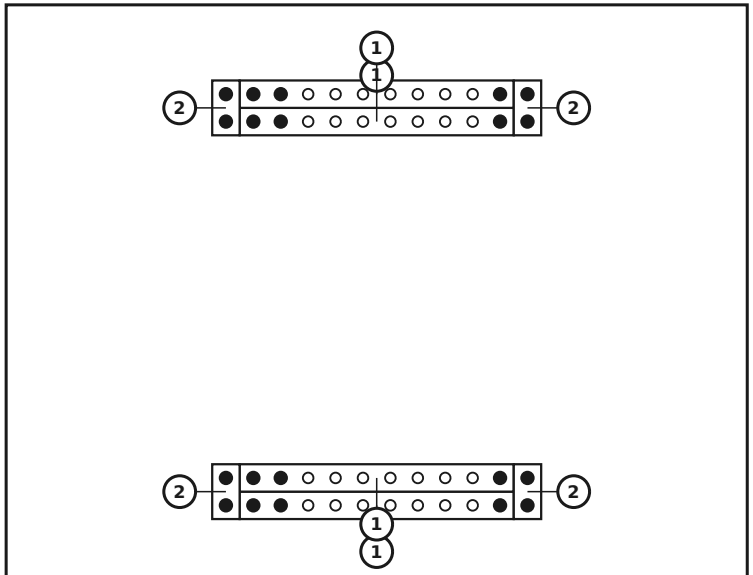

PARTS IN THIS COURSE

no.	size (mm)	drawing	holes	qty
2	60 x 120 x 120		2× Ø12	**4**
1	60 x 120 x 600		10× Ø12	**4**
	Connectors			**20**

Course 2 / 7

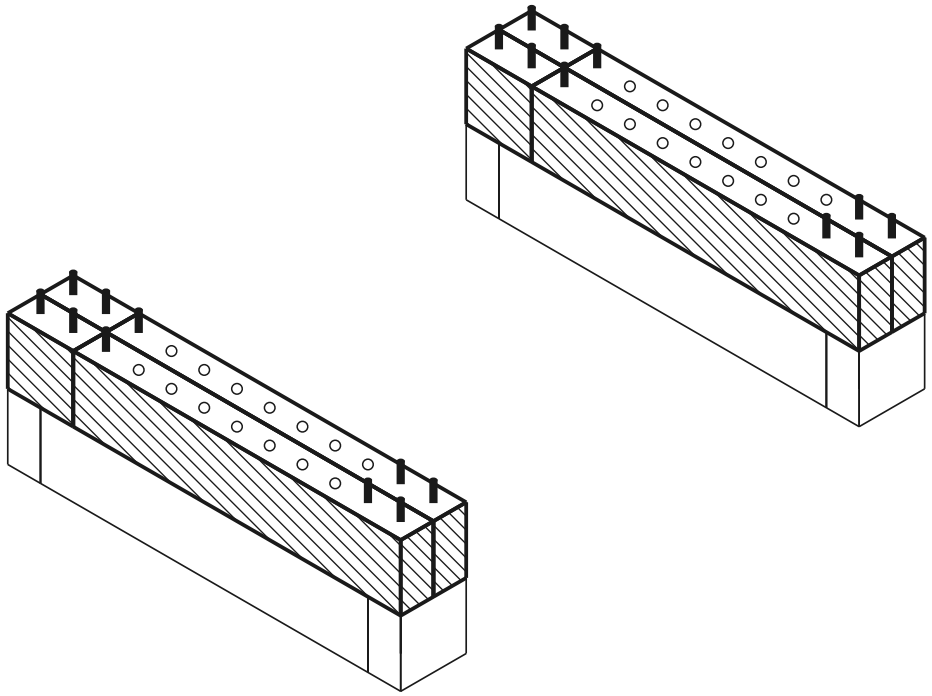

current course built dowel hole

TOP VIEW - WHICH PART GOES WHERE

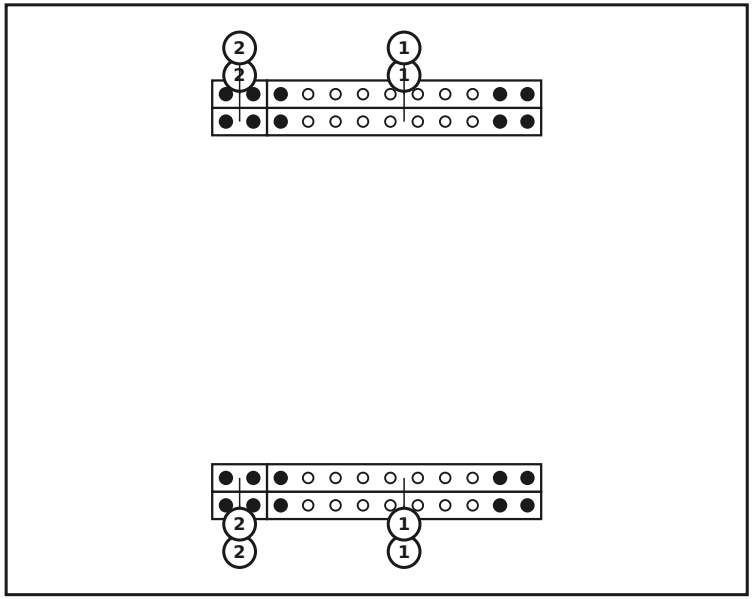

PARTS IN THIS COURSE

no.	size (mm)	drawing	holes	qty
2	60 x 120 x 120		2× Ø12	**4**
1	60 x 120 x 600		10× Ø12	**4**
	Connectors			**20**

Course 3 / 7

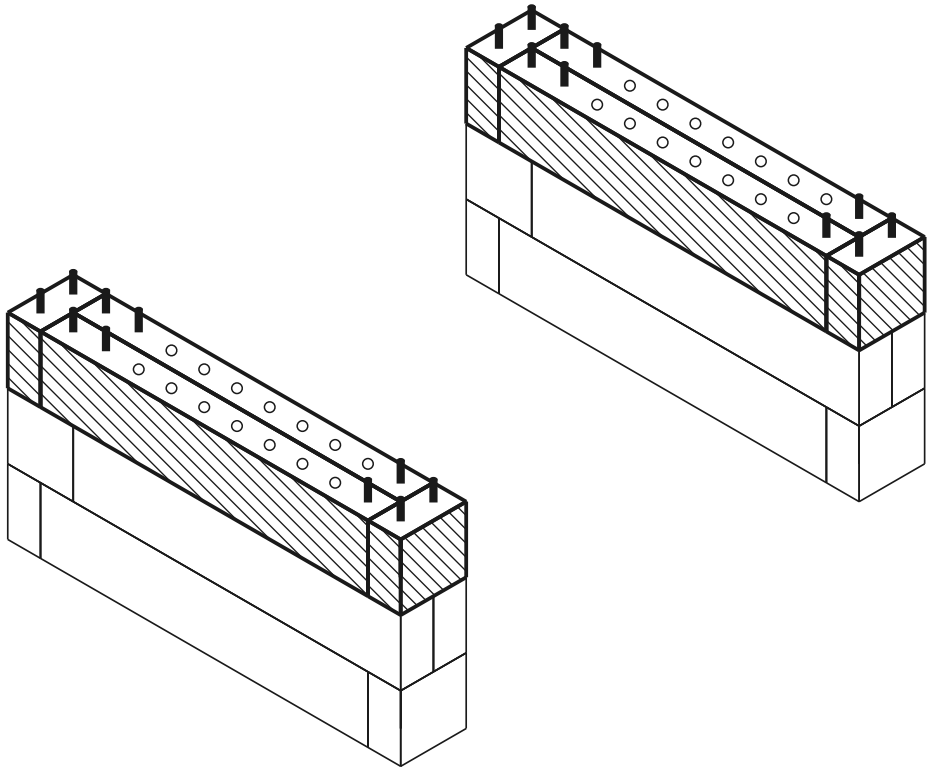

current course built dowel hole

TOP VIEW - WHICH PART GOES WHERE

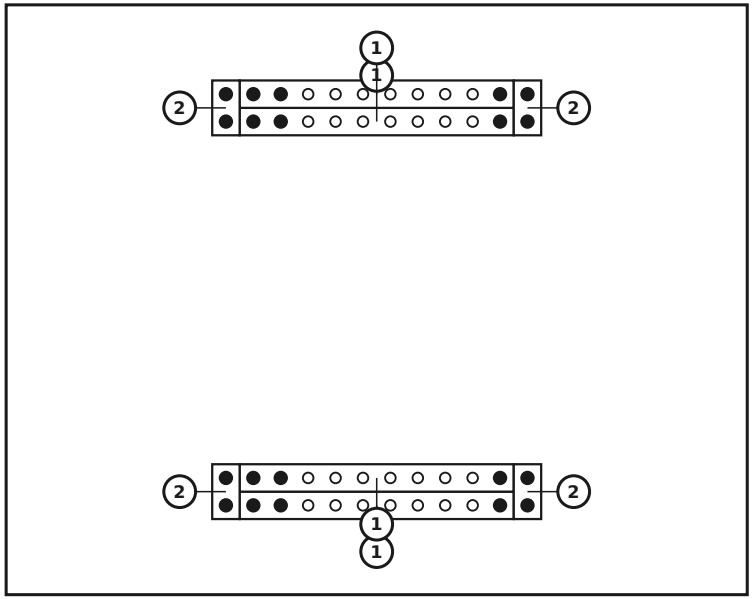

PARTS IN THIS COURSE

no.	size (mm)	drawing	holes	qty
2	60 x 120 x 120		2× Ø12	**4**
1	60 x 120 x 600		10× Ø12	**4**
	Connectors			**20**

Course 4 / 7

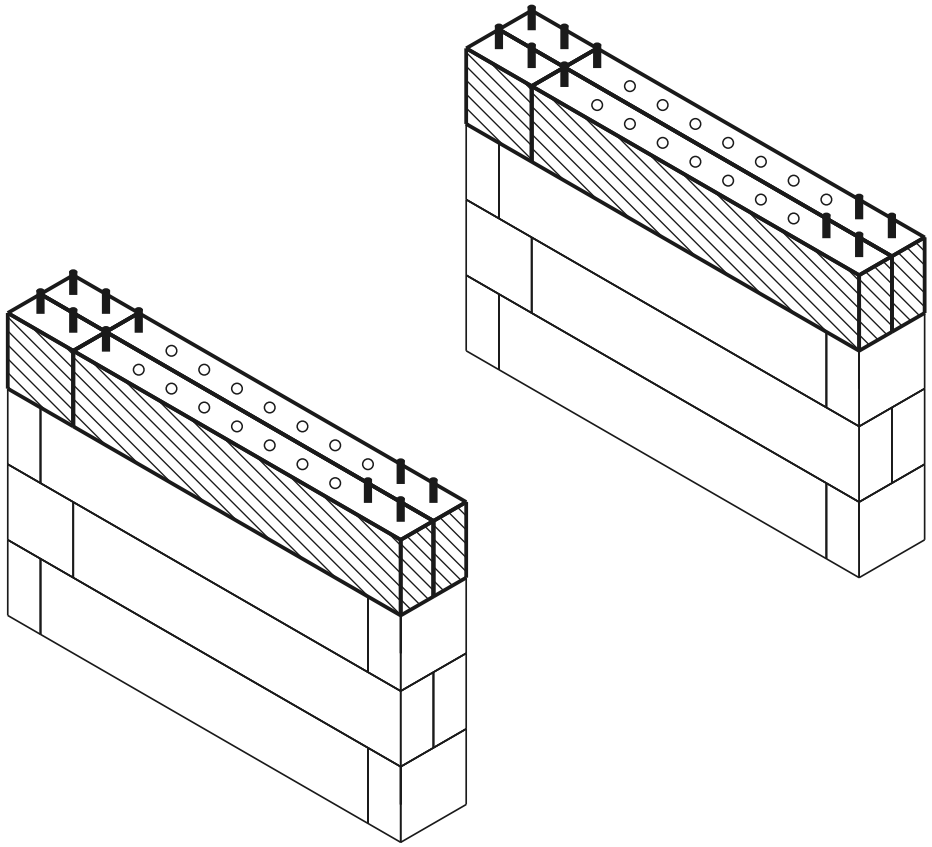

current course built dowel hole

TOP VIEW - WHICH PART GOES WHERE

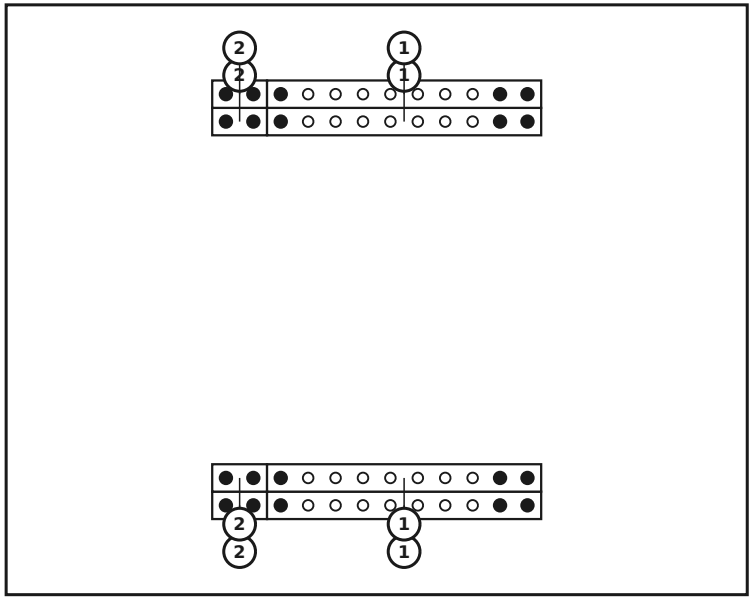

PARTS IN THIS COURSE

no.	size (mm)	drawing	holes	qty
2	60 x 120 x 120		2× Ø12	**4**
1	60 x 120 x 600		10× Ø12	**4**
	Connectors			**20**

Course 5 / 7

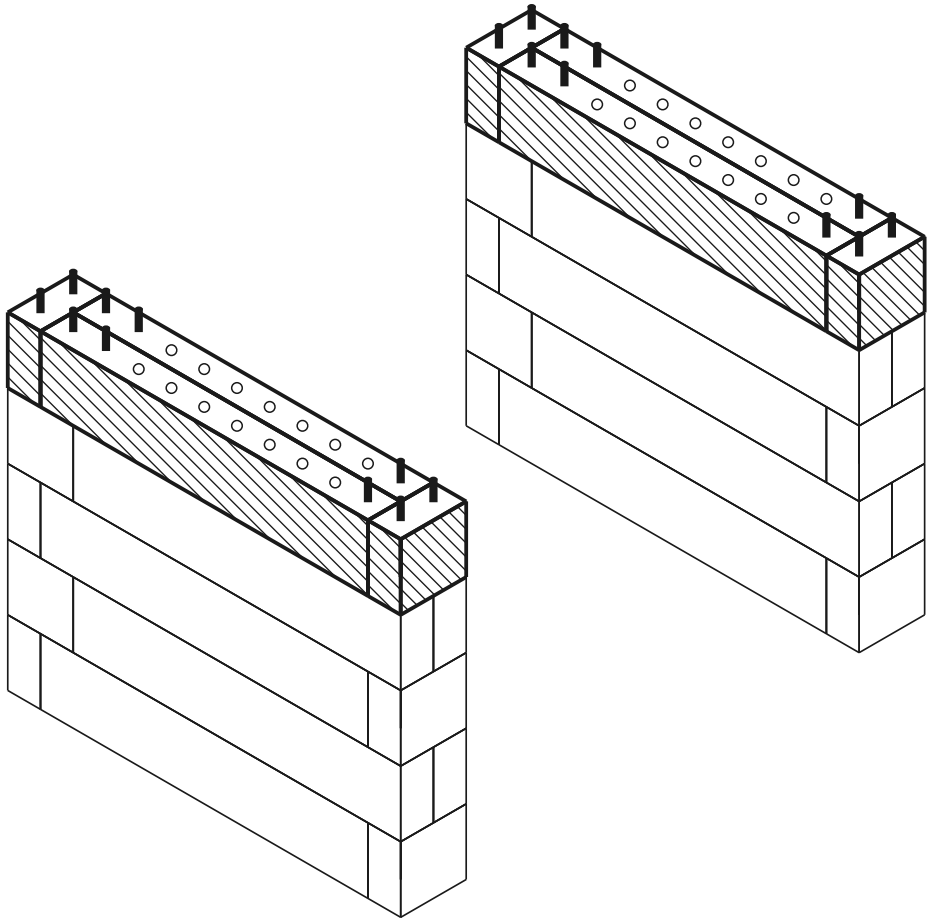

current course built dowel hole

TOP VIEW - WHICH PART GOES WHERE

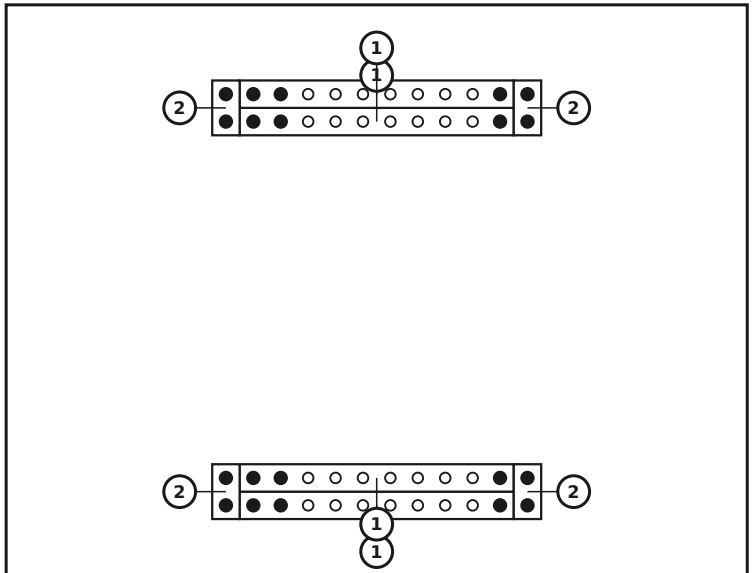

PARTS IN THIS COURSE

no.	size (mm)	drawing	holes	qty
2	60 x 120 x 120		2× Ø12	**4**
1	60 x 120 x 600		10× Ø12	**4**
	Connectors			**20**

Course 6 / 7

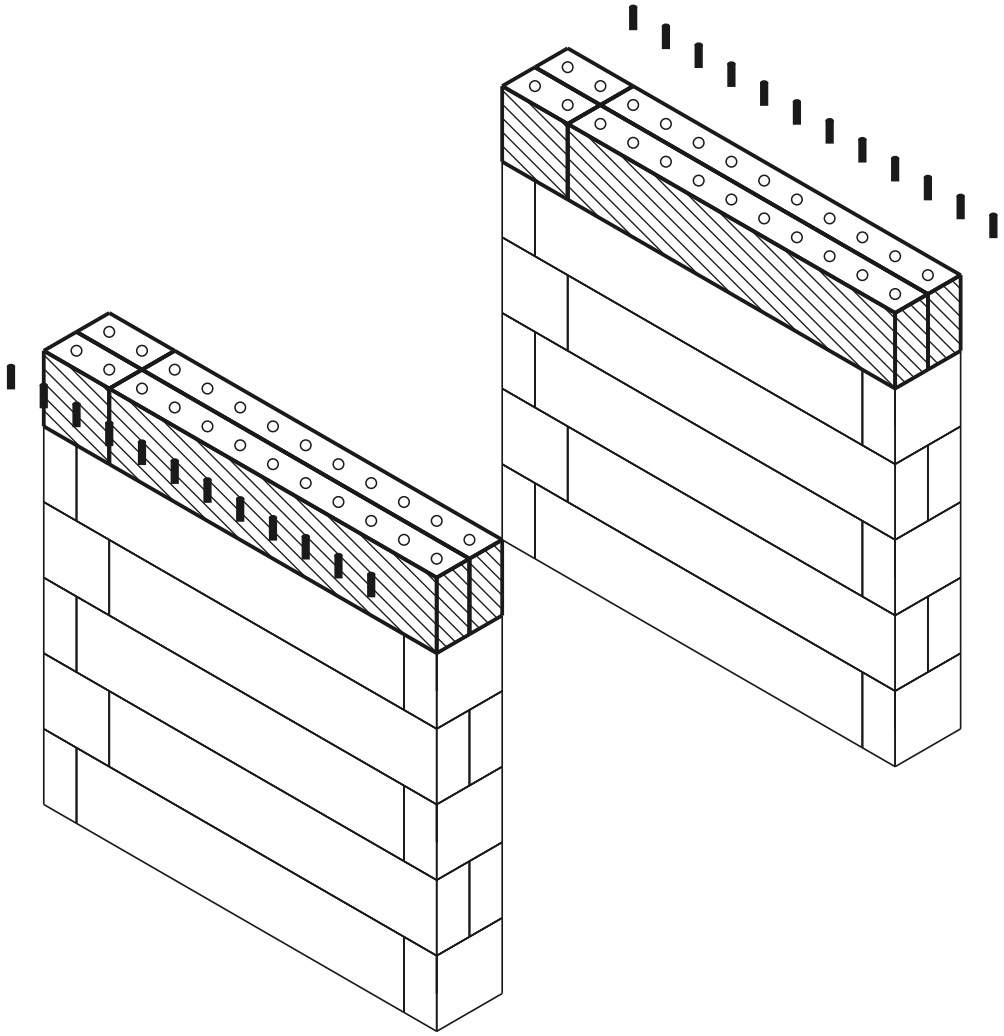

current course built dowel hole

TOP VIEW - WHICH PART GOES WHERE

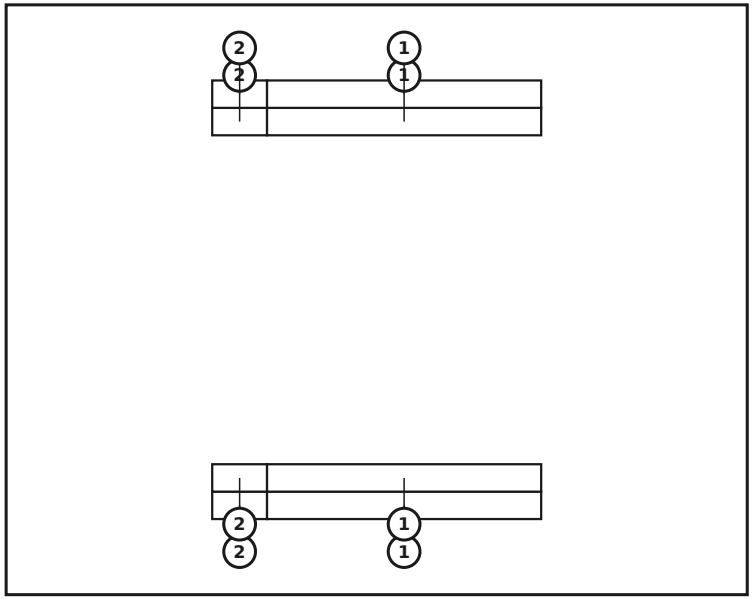

PARTS IN THIS COURSE

no.	size (mm)	drawing	holes	qty
2	60 x 120 x 120		2× Ø12	**4**
1	60 x 120 x 600		10× Ø12	**4**
	Connectors			**0**

Course 7 / 7 — Fitting the bench seat

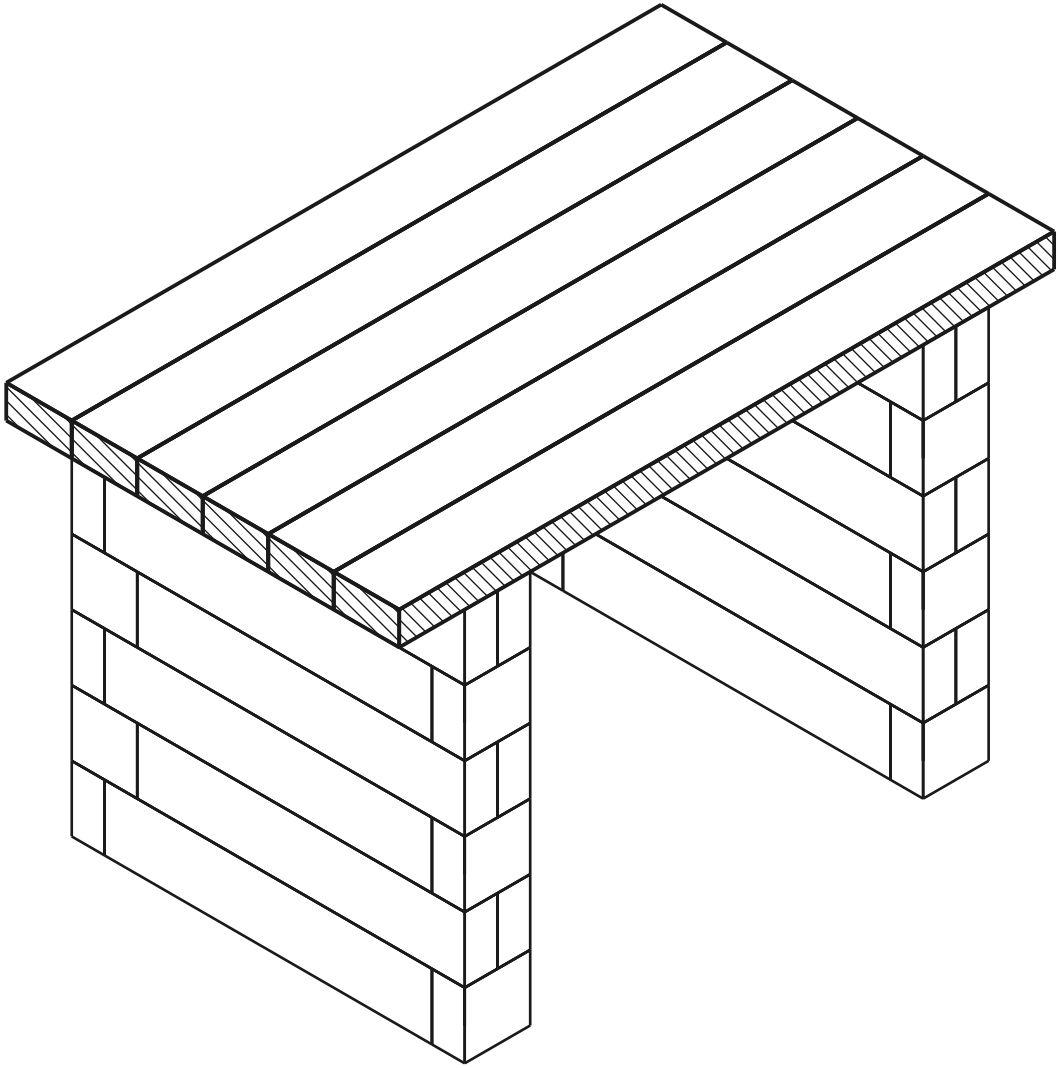

current course built dowel hole

TOP VIEW - WHICH PART GOES WHERE

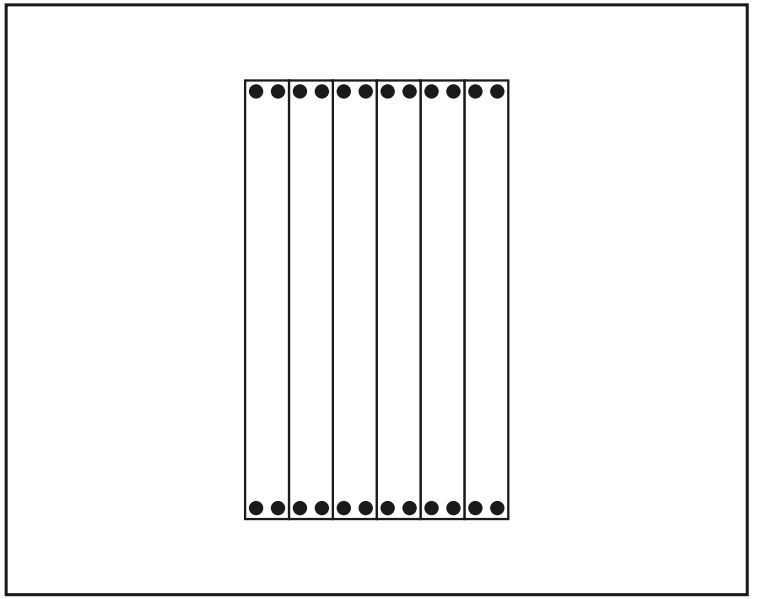

PARTS IN THIS COURSE

size (mm)	drawing	holes	qty
60 x 120 x 1200		4× Ø12	**6**
Connectors			**24**

Tap the connectors into the top course of the wall, then set the seat board onto them from above.

Finished model

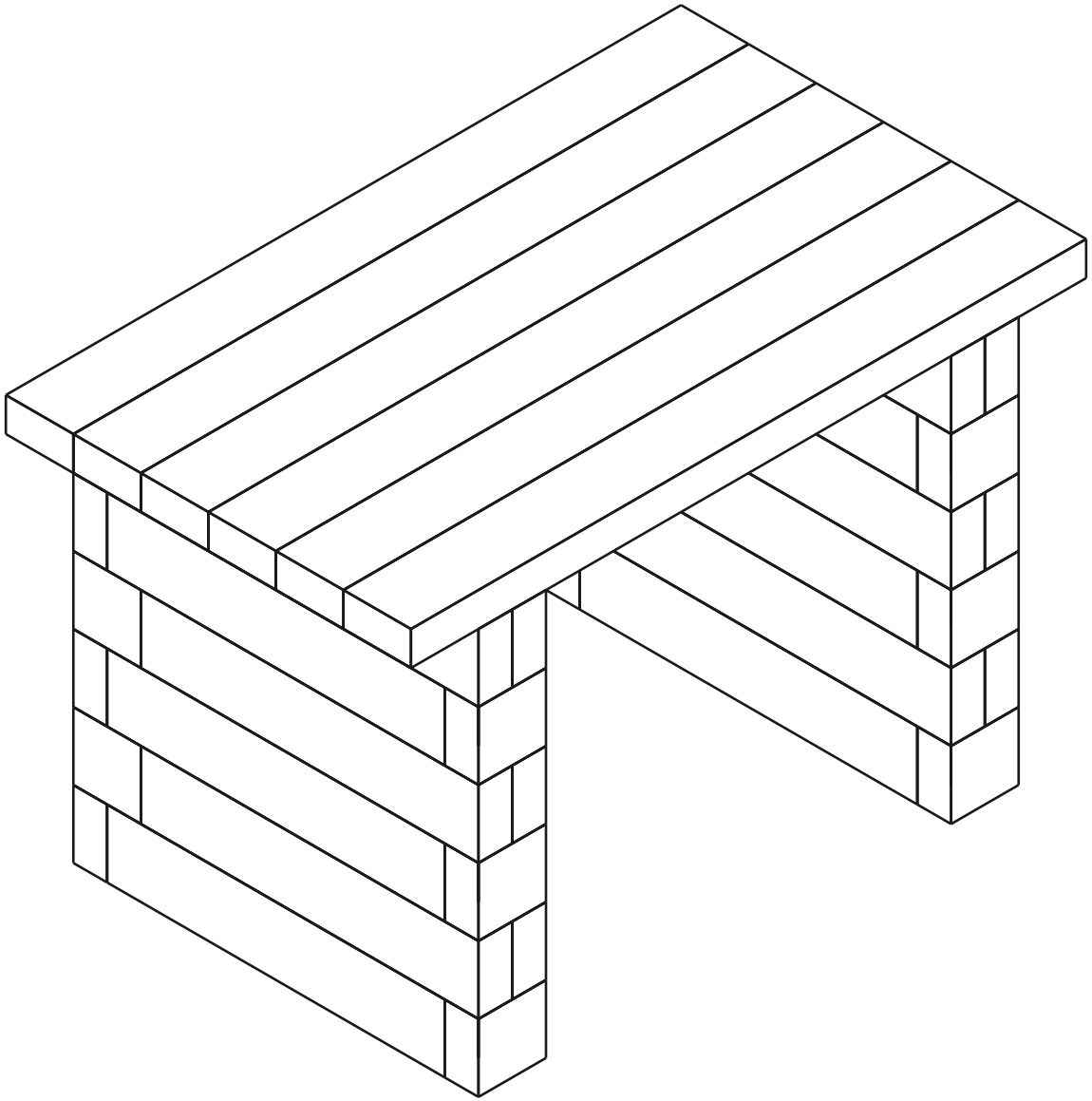

Bill of materials (BOM)

Part	Role	Qty
60×120×600 mm (BOTTOM)	bottom	4
60×120×120 mm (BOTTOM)	bottom	4
60×120×600 mm	middle	20
60×120×120 mm	middle	20
Bench seat 1200mm	seat	6
Connector (12×70 mm pin)	-	124

Total: 54 parts