Assembly guide

Brick Premium Garden Seating Set — Table and Two Benches - GridGarden

PARTS LIST

no.	size (mm)	drawing	holes	qty
4	60 x 120 x 120		2× Ø12	**32**
3	60 x 120 x 360		6× Ø12	**8**
2	60 x 120 x 480		8× Ø12	**16**
1	60 x 120 x 600	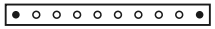	10× Ø12	**24**
	60 x 120 x 1200	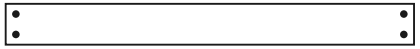	4× Ø12	**14**
	Connectors	●		**220**

94 parts + 220 dowels in total.

Parts are numbered by length (longest = 1).

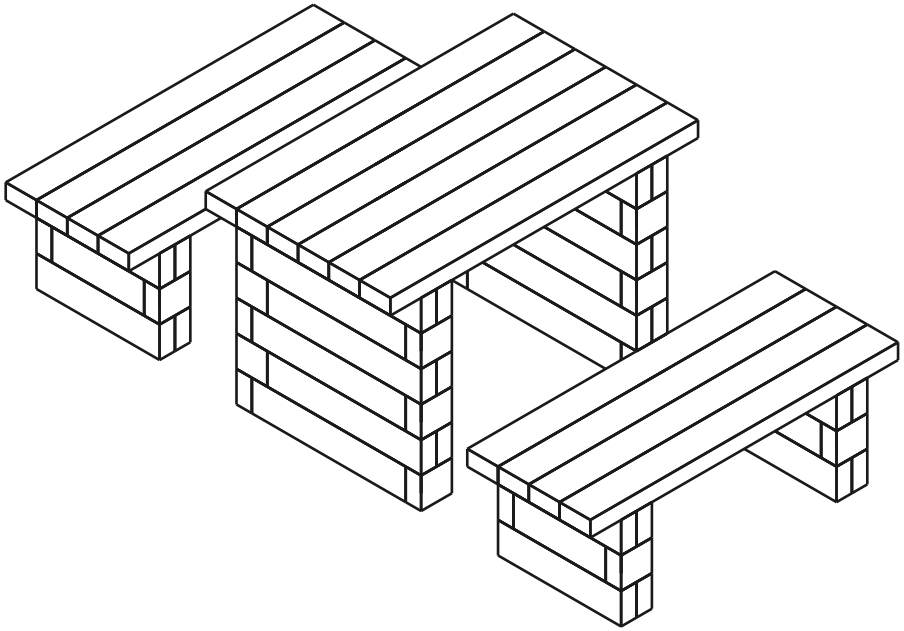

94	**8**	**220**
PARTS	COURSES	DOWELS

Course 1 / 8

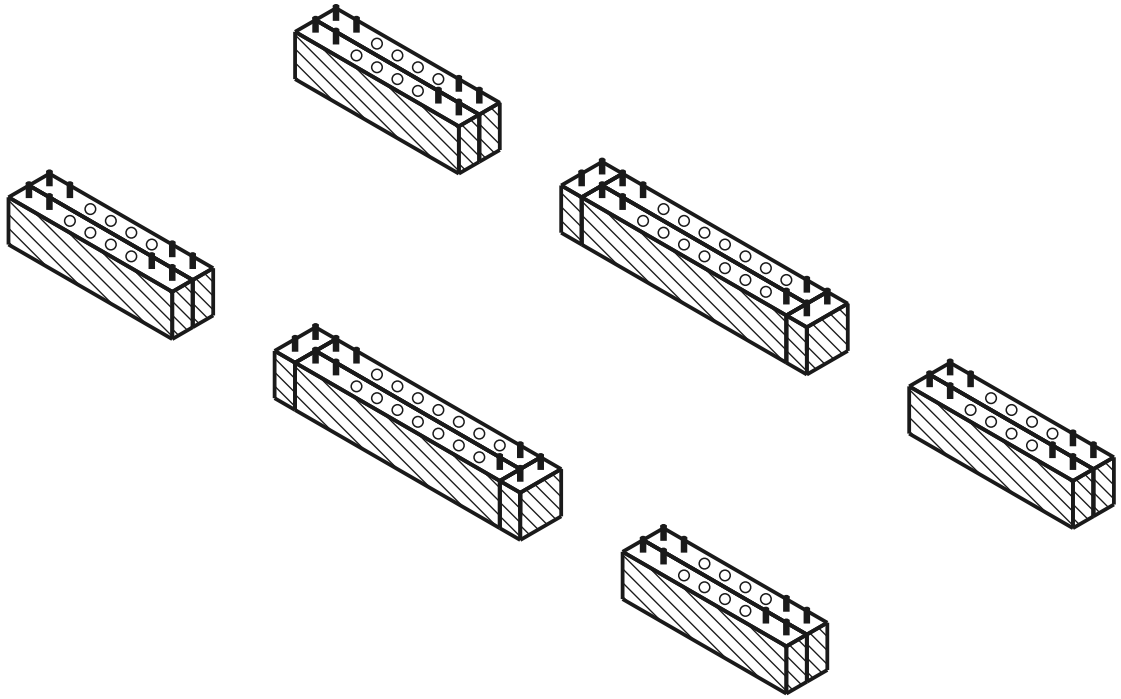

current course built dowel hole

TOP VIEW - WHICH PART GOES WHERE

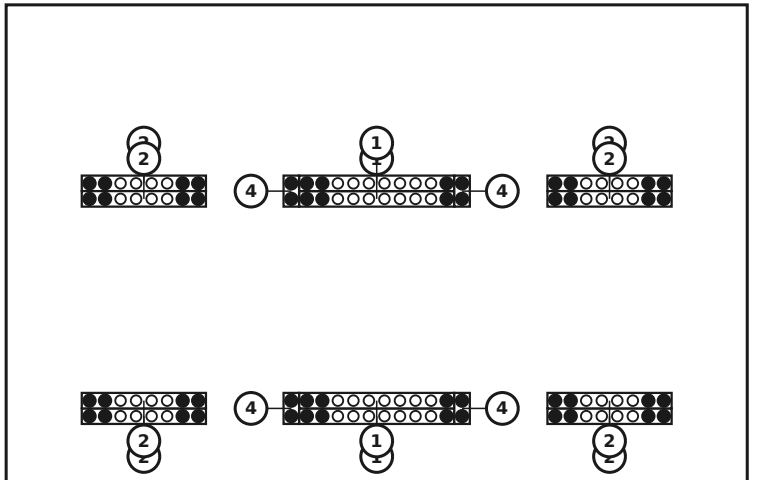

PARTS IN THIS COURSE

no.	size (mm)	drawing	holes	qty
4	60 x 120 x 120		2× Ø12	**4**
2	60 x 120 x 480		8× Ø12	**8**
1	60 x 120 x 600		10× Ø12	**4**
	Connectors			**52**

Course 2 / 8

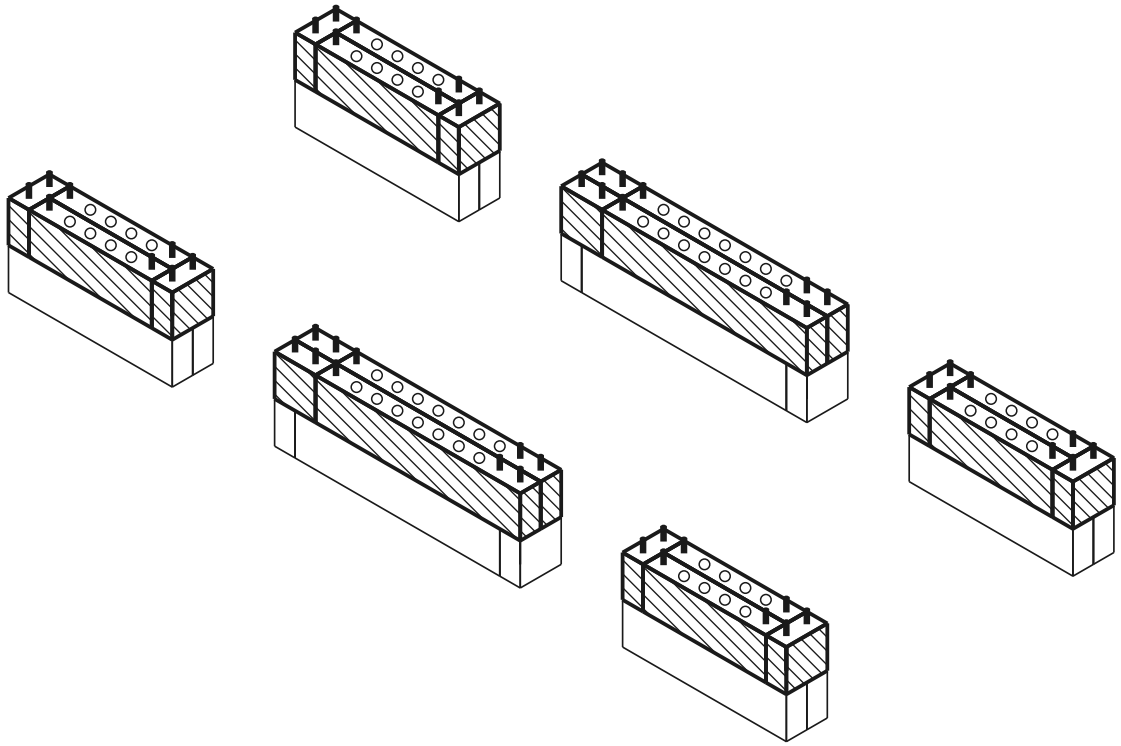

current course built dowel hole

TOP VIEW - WHICH PART GOES WHERE

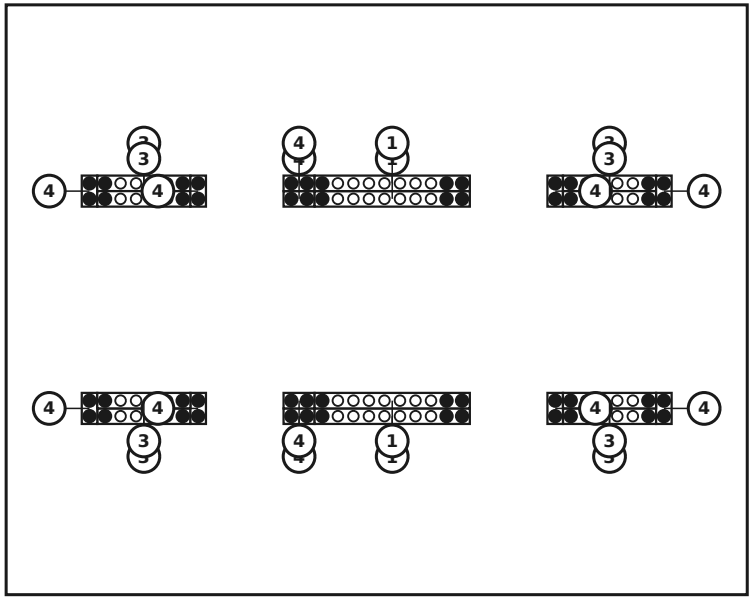

PARTS IN THIS COURSE

no.	size (mm)	drawing	holes	qty
4	60 x 120 x 120	• •	2× Ø12	**12**
3	60 x 120 x 360	• ○ ○ ○ ○ •	6× Ø12	**8**
1	60 x 120 x 600	• ○ ○ ○ ○ ○ ○ ○ ○ •	10× Ø12	**4**
	Connectors	●		**52**

Course 3 / 8

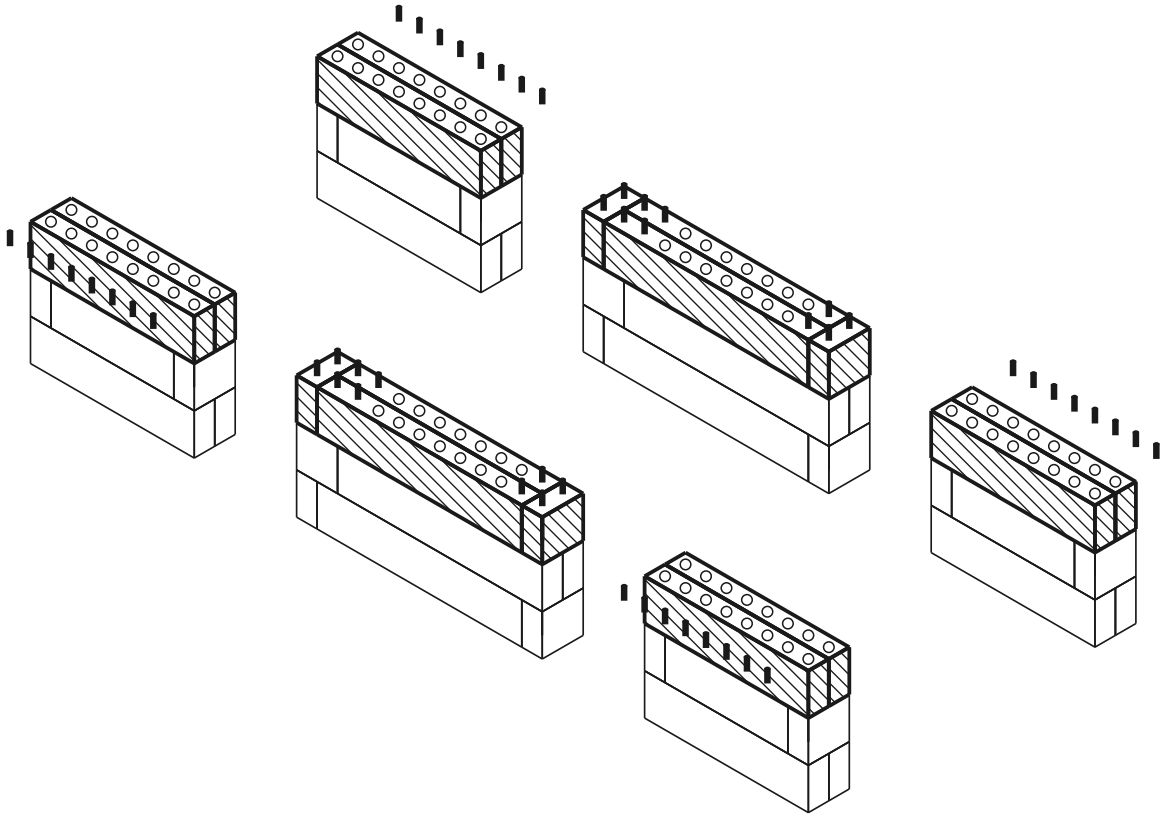

current course built dowel hole

TOP VIEW - WHICH PART GOES WHERE

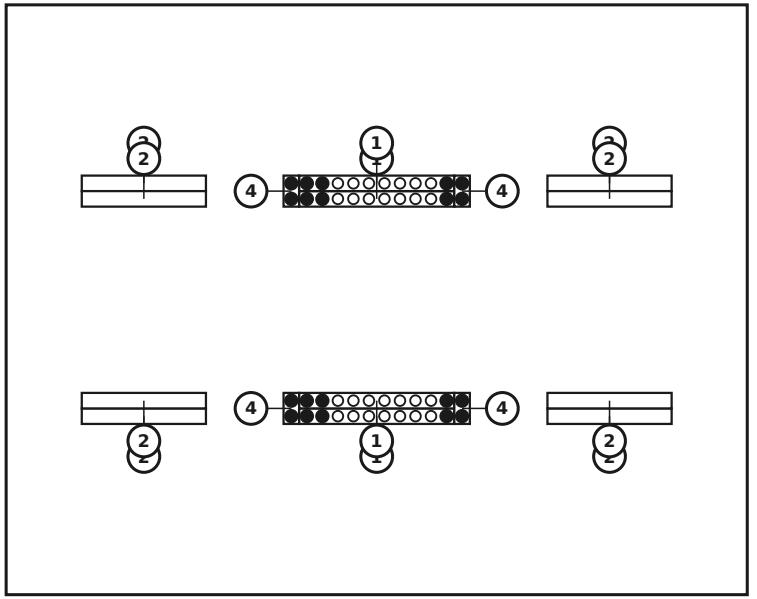

PARTS IN THIS COURSE

no.	size (mm)	drawing	holes	qty
4	60 x 120 x 120		2× Ø12	**4**
2	60 x 120 x 480		8× Ø12	**8**
1	60 x 120 x 600		10× Ø12	**4**
	Connectors			**20**

Course 4 / 8 — Fitting the bench seat

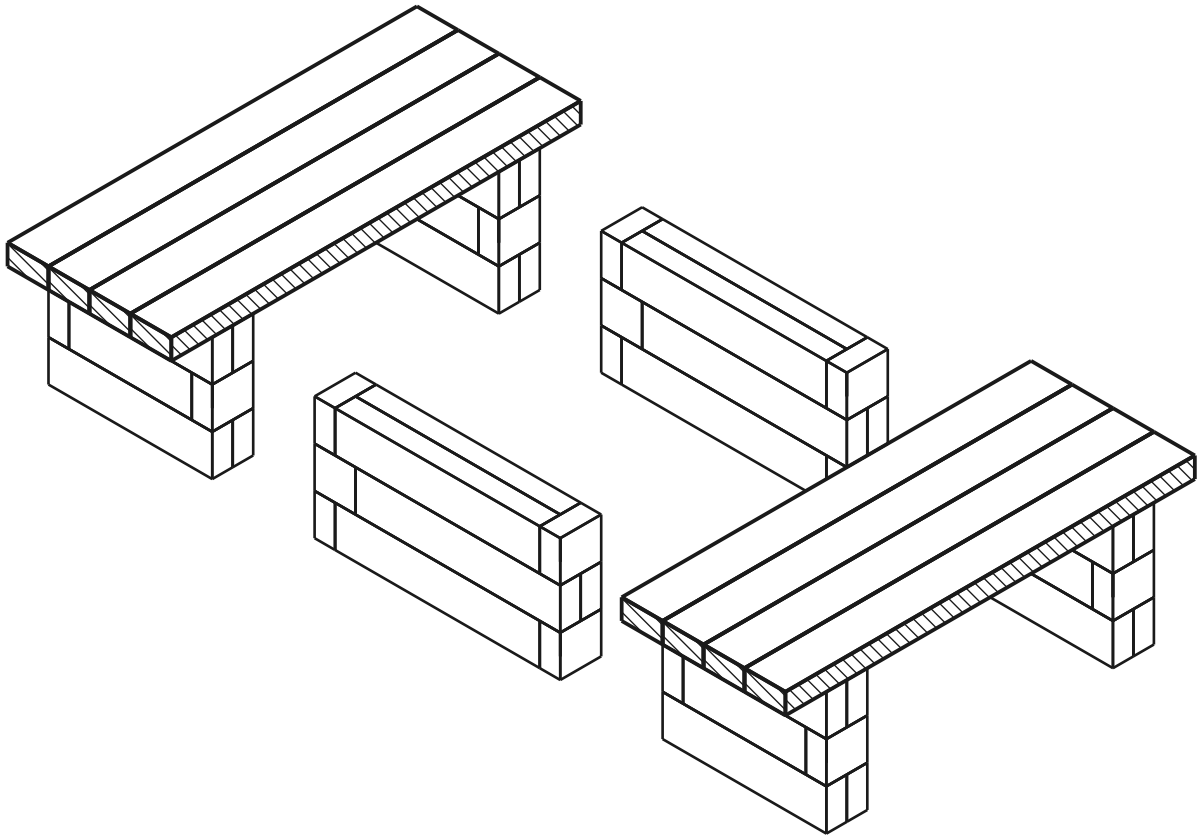

current course built dowel hole

Tap the connectors into the top course of the wall, then set the seat board onto them from above.

TOP VIEW - WHICH PART GOES WHERE

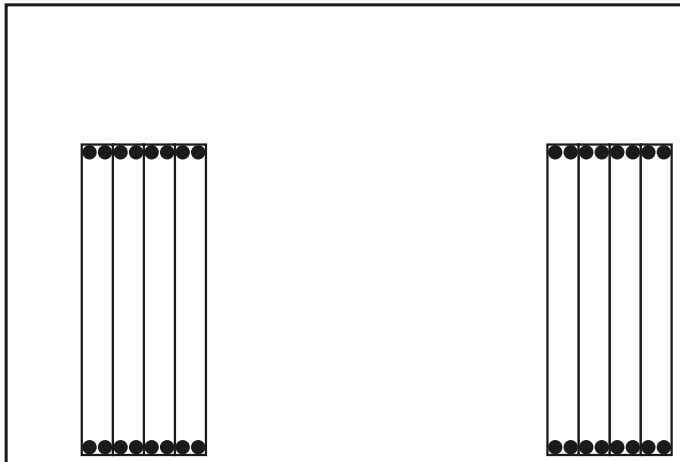

PARTS IN THIS COURSE

size (mm)	drawing	holes	qty
60 x 120 x 1200		4× Ø12	**8**
Connectors	●		**32**

Course 5 / 8

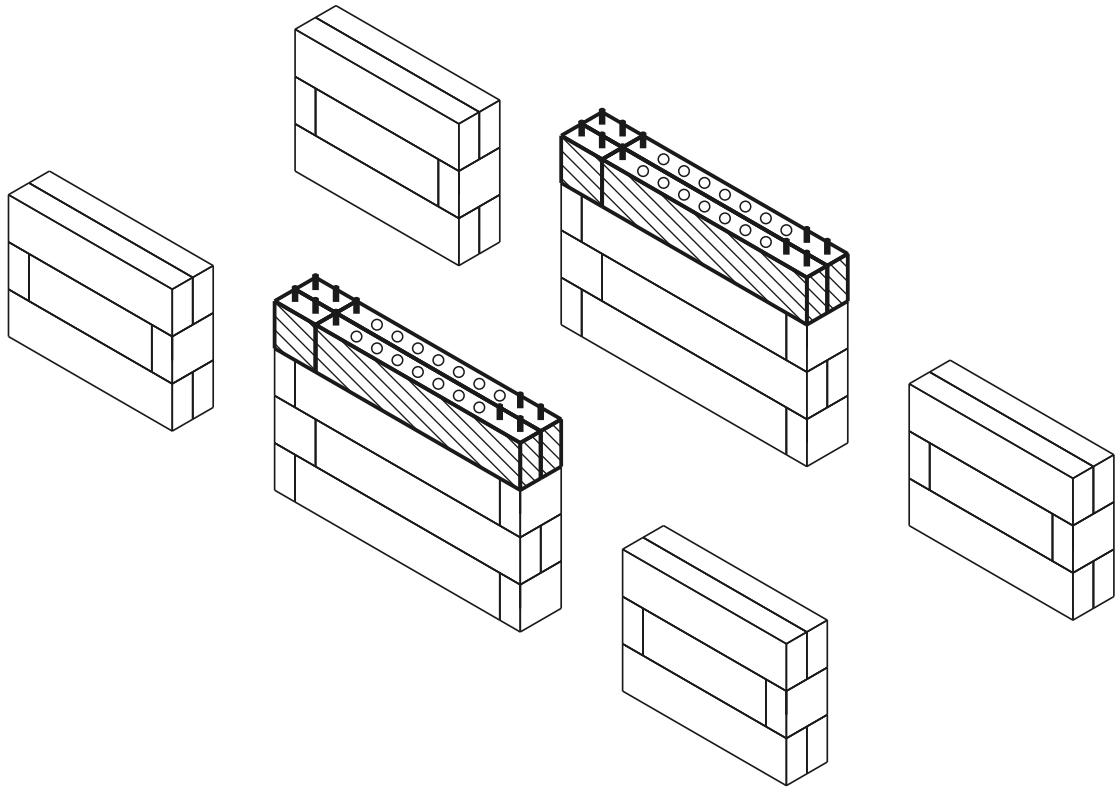

current course built dowel hole

TOP VIEW - WHICH PART GOES WHERE

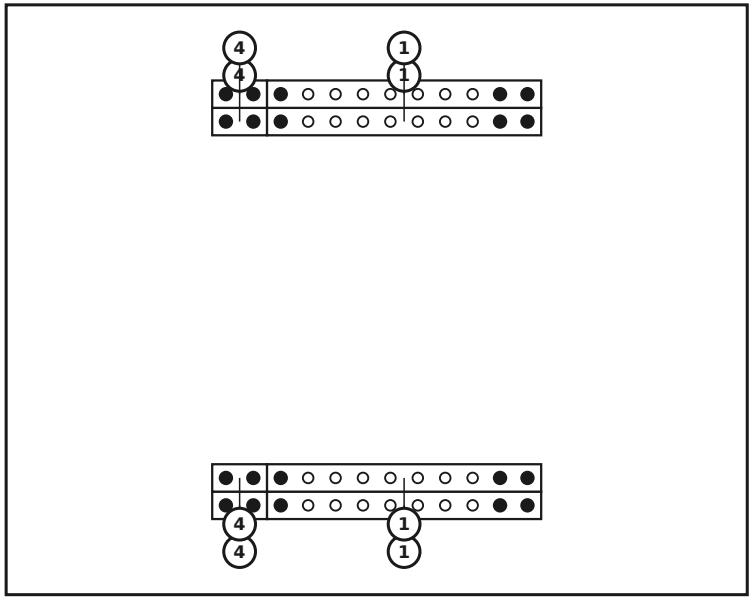

PARTS IN THIS COURSE

no.	size (mm)	drawing	holes	qty
4	60 x 120 x 120		2× Ø12	**4**
1	60 x 120 x 600		10× Ø12	**4**
	Connectors			**20**

Course 6 / 8

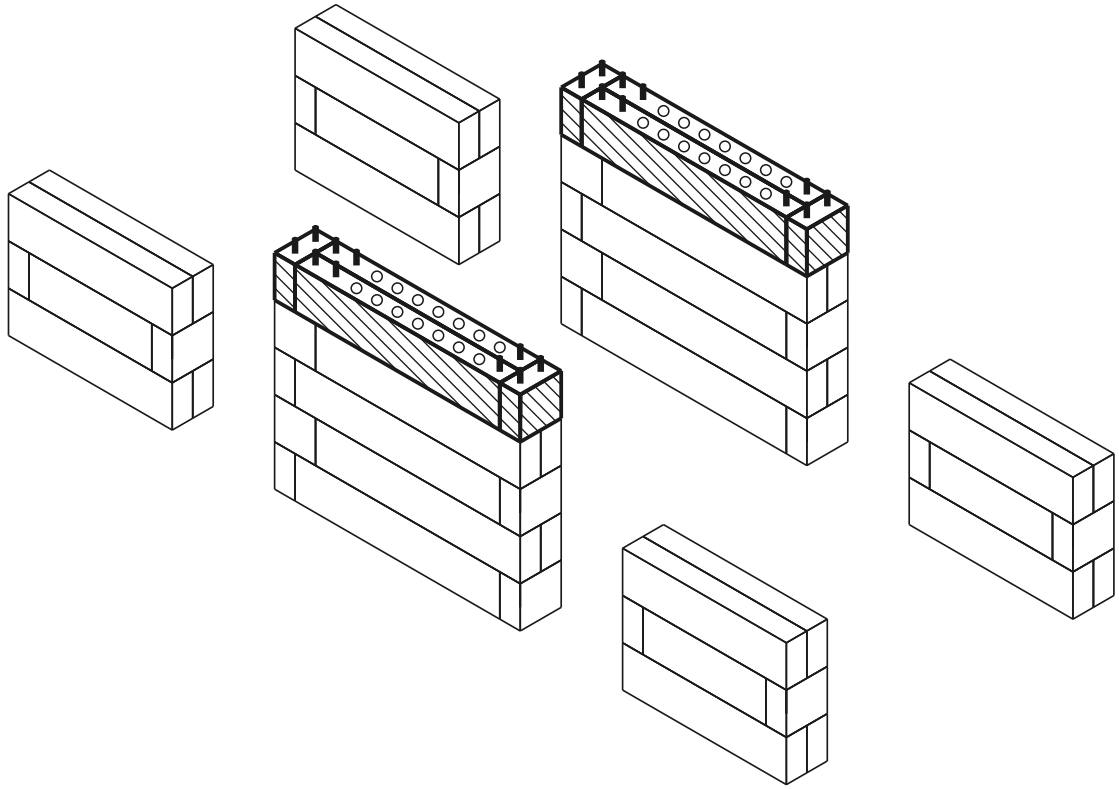

current course built dowel hole

TOP VIEW - WHICH PART GOES WHERE

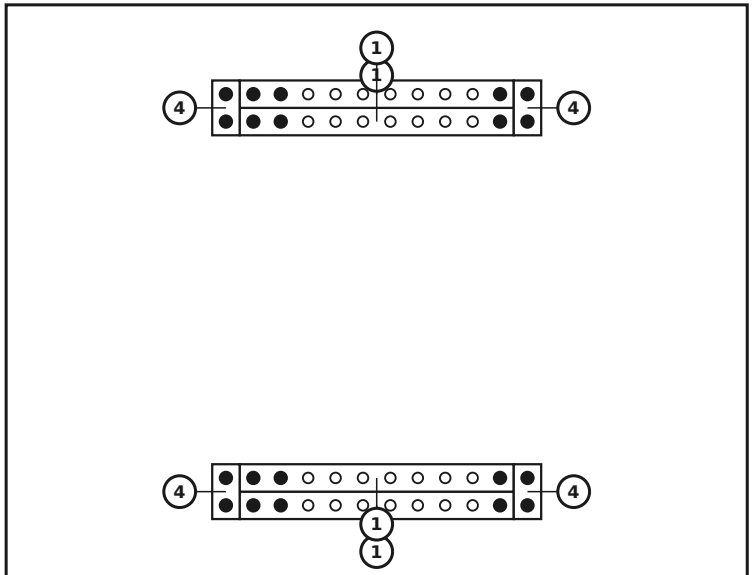

PARTS IN THIS COURSE

no.	size (mm)	drawing	holes	qty
4	60 x 120 x 120		2× Ø12	**4**
1	60 x 120 x 600		10× Ø12	**4**
	Connectors			**20**

Course 7 / 8

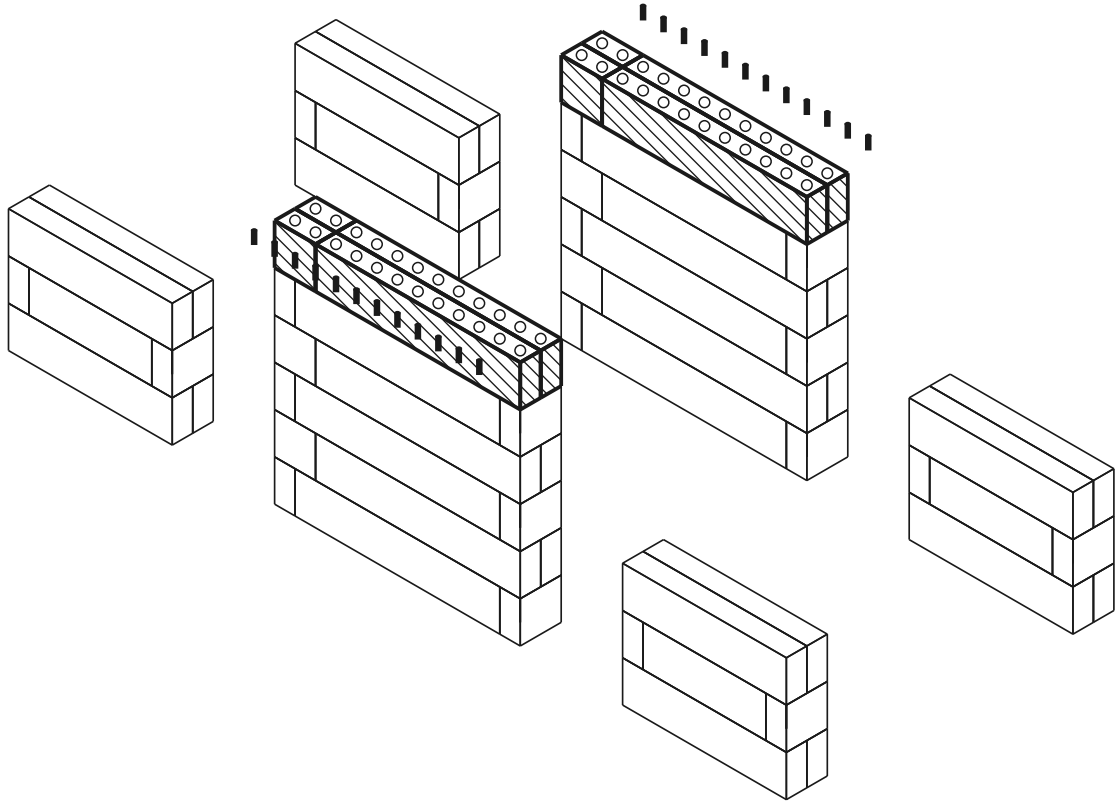

current course built dowel hole

TOP VIEW - WHICH PART GOES WHERE

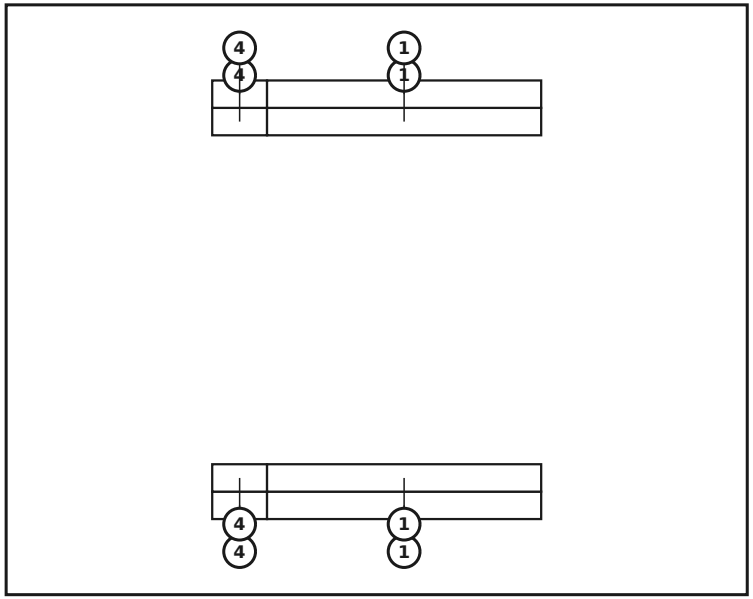

PARTS IN THIS COURSE

no.	size (mm)	drawing	holes	qty
4	60 x 120 x 120		2× Ø12	**4**
1	60 x 120 x 600		10× Ø12	**4**
	Connectors			**0**

Course 8 / 8 — Fitting the bench seat

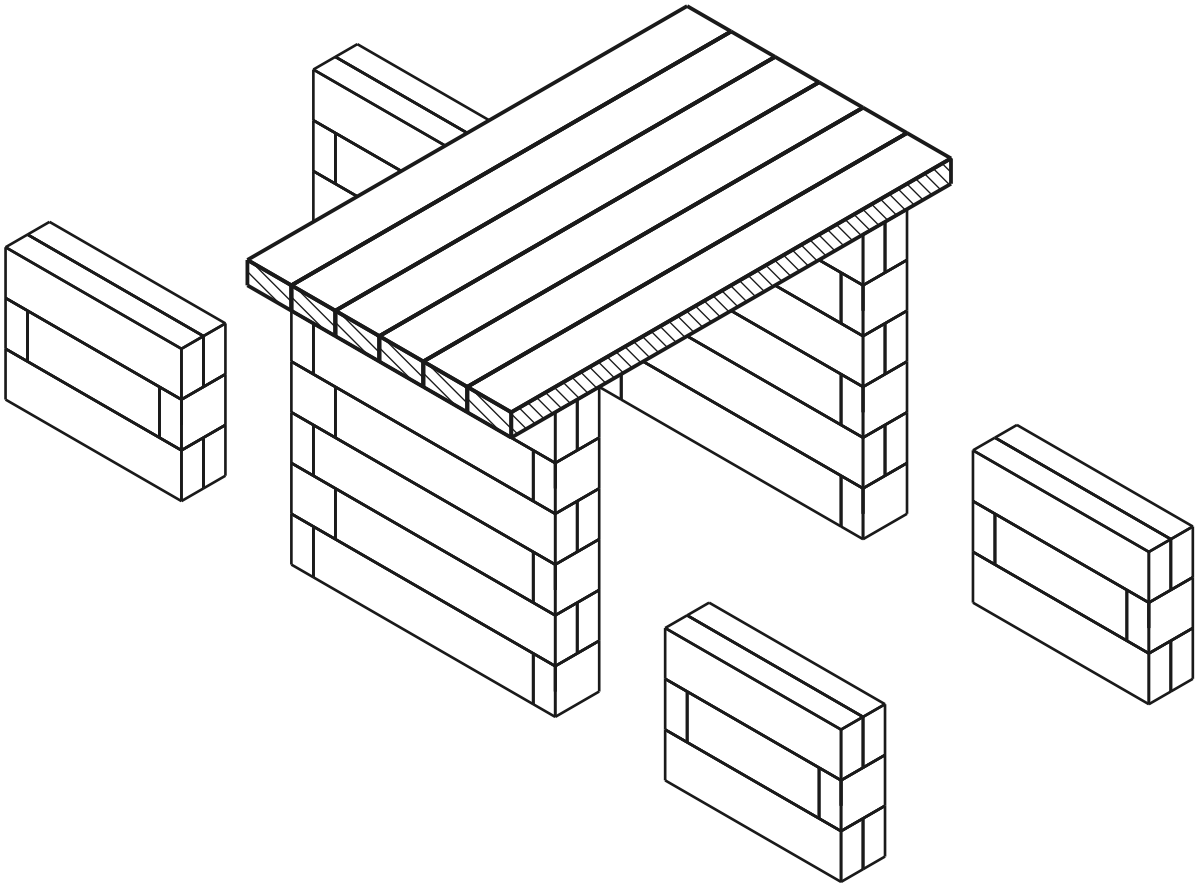

current course built dowel hole

TOP VIEW - WHICH PART GOES WHERE

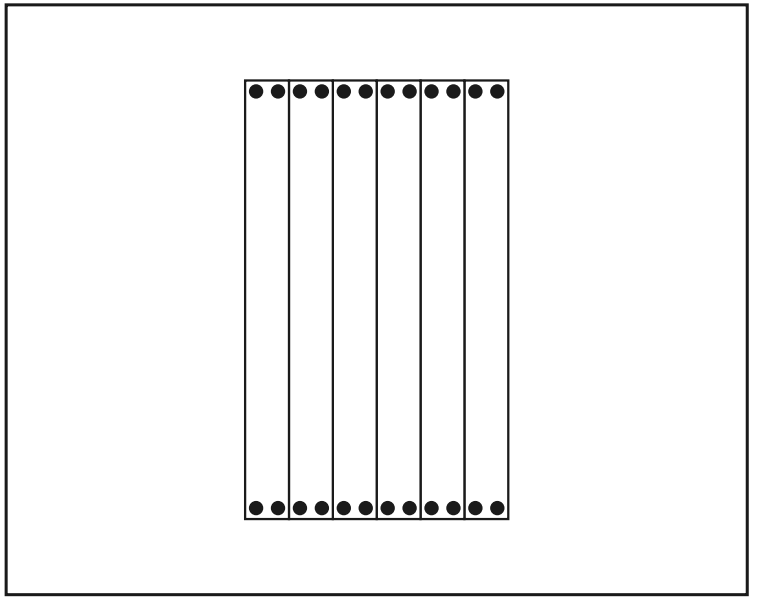

PARTS IN THIS COURSE

size (mm)	drawing	holes	qty
60 x 120 x 1200		4× Ø12	**6**
Connectors	●		**24**

Tap the connectors into the top course of the wall, then set the seat board onto them from above.

Finished model

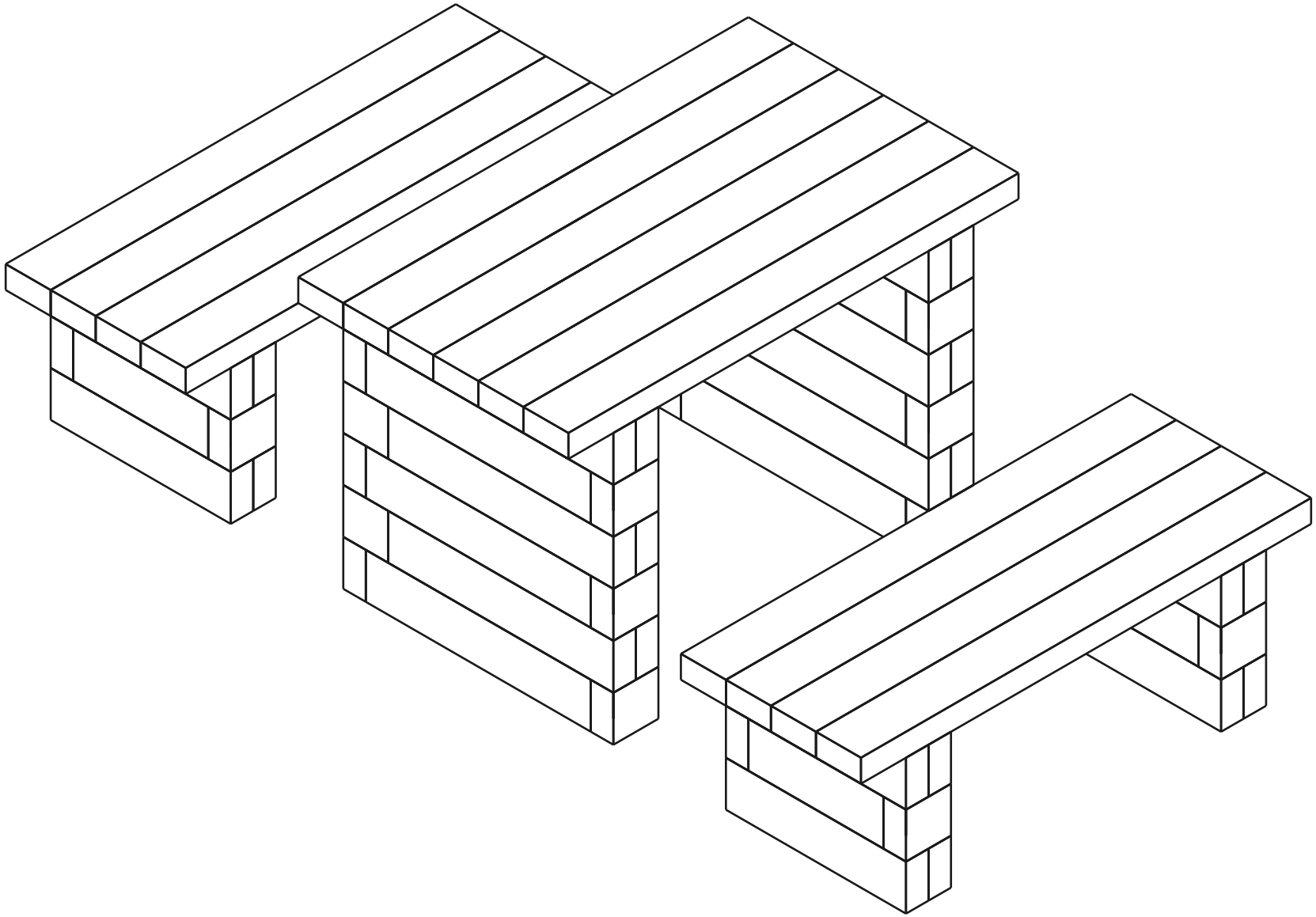

Bill of materials (BOM)

Part	Role	Qty
60×120×600 mm (BOTTOM)	bottom	4
60×120×480 mm (BOTTOM)	bottom	8
60×120×120 mm (BOTTOM)	bottom	4
60×120×600 mm	middle	20
60×120×480 mm	middle	8
60×120×360 mm	middle	8
60×120×120 mm	middle	28
Bench seat 1200mm	seat	14
Connector (12×70 mm pin)	-	220

Total: 94 parts