Assembly guide

Brick Premium Garden Bench with Built-In Planter - GridGarden

PARTS LIST

no.	size (mm)	drawing	holes	qty
5	60 x 120 x 360		6× Ø12	**2**
5	60 x 60 x 360		6× Ø12	**2**
4	60 x 120 x 420	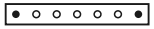	7× Ø12	**6**
3	60 x 120 x 480		8× Ø12	**7**
3	60 x 60 x 480		8× Ø12	**2**
2	60 x 120 x 540		9× Ø12	**2**
1	60 x 120 x 600		10× Ø12	**4**
	60 x 120 x 1200	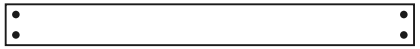	4× Ø12	**4**
	Connectors	●		**72**

29 parts + 72 dowels in total.

Parts are numbered by length (longest = 1).

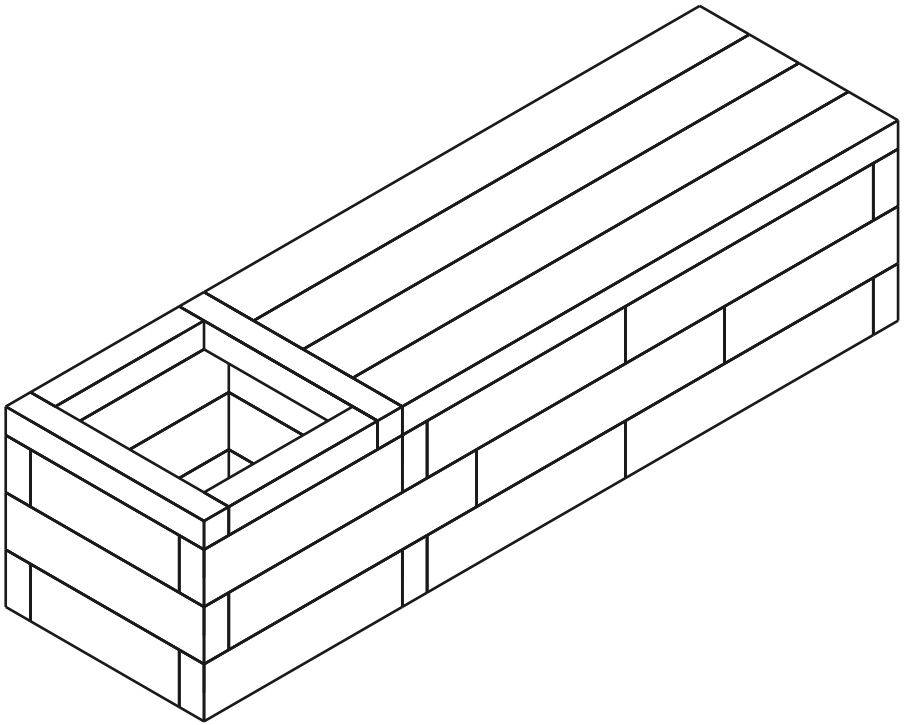

29	**4**	**72**
PARTS	COURSES	DOWELS

Course 1 / 4

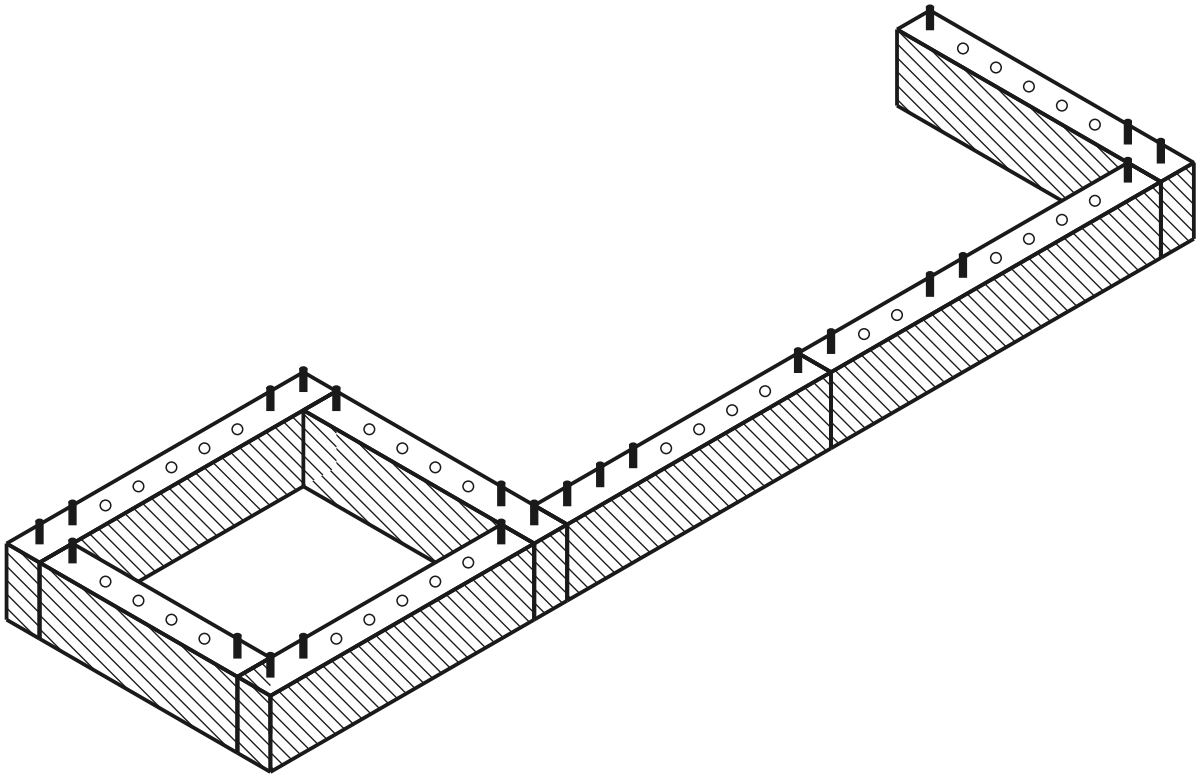

current course built dowel hole

TOP VIEW - WHICH PART GOES WHERE

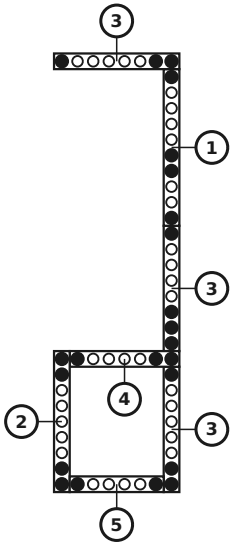

PARTS IN THIS COURSE

no.	size (mm)	drawing	holes	qty
5	60 x 120 x 360		6× Ø12	1
4	60 x 120 x 420		7× Ø12	1
3	60 x 120 x 480		8× Ø12	3
2	60 x 120 x 540		9× Ø12	1
1	60 x 120 x 600		10× Ø12	1
	Connectors	●		23

Course 2 / 4

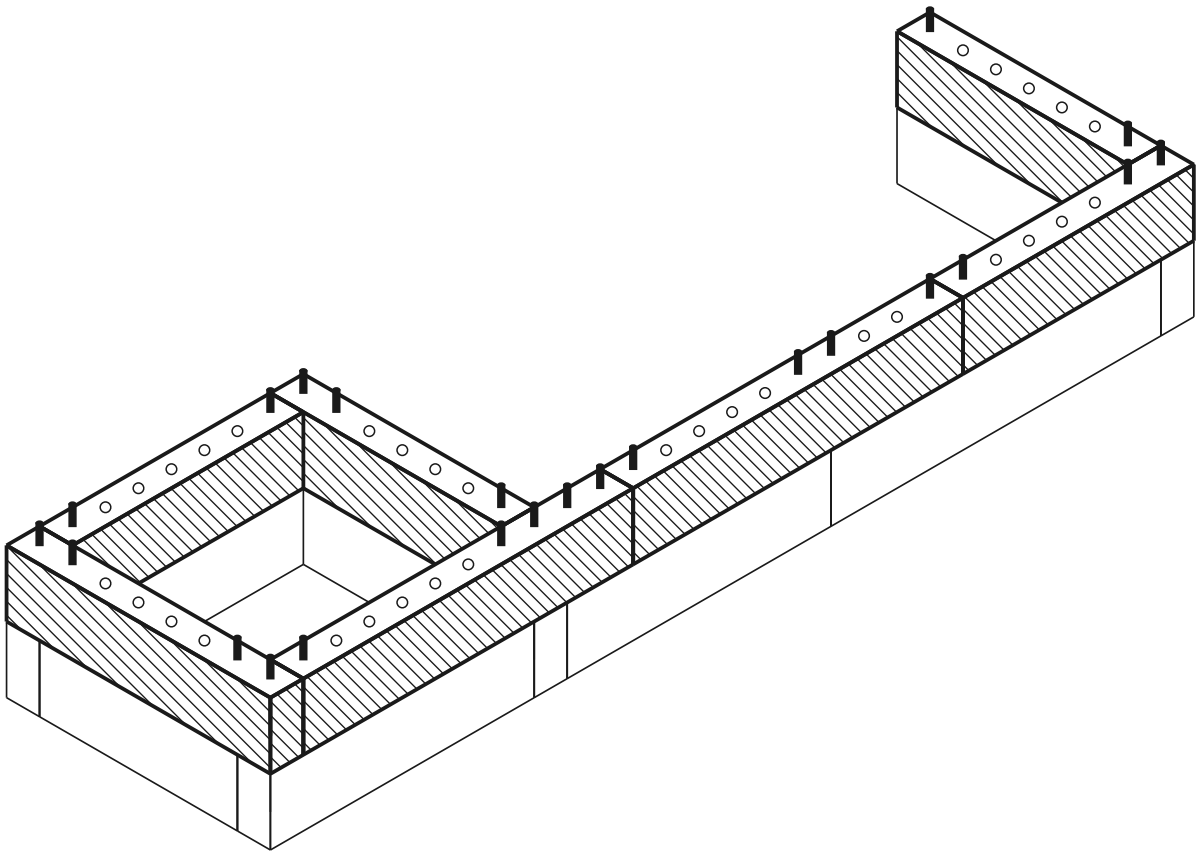

current course built dowel hole

TOP VIEW - WHICH PART GOES WHERE

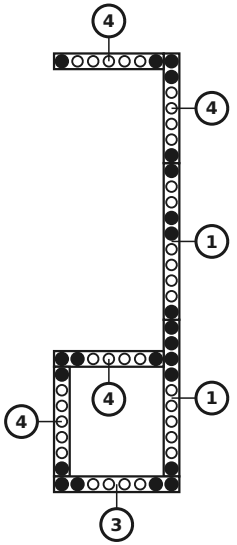

PARTS IN THIS COURSE

no.	size (mm)	drawing	holes	qty
4	60 x 120 x 420		7× Ø12	4
3	60 x 120 x 480		8× Ø12	1
1	60 x 120 x 600		10× Ø12	2
	Connectors	●		23

Course 3 / 4

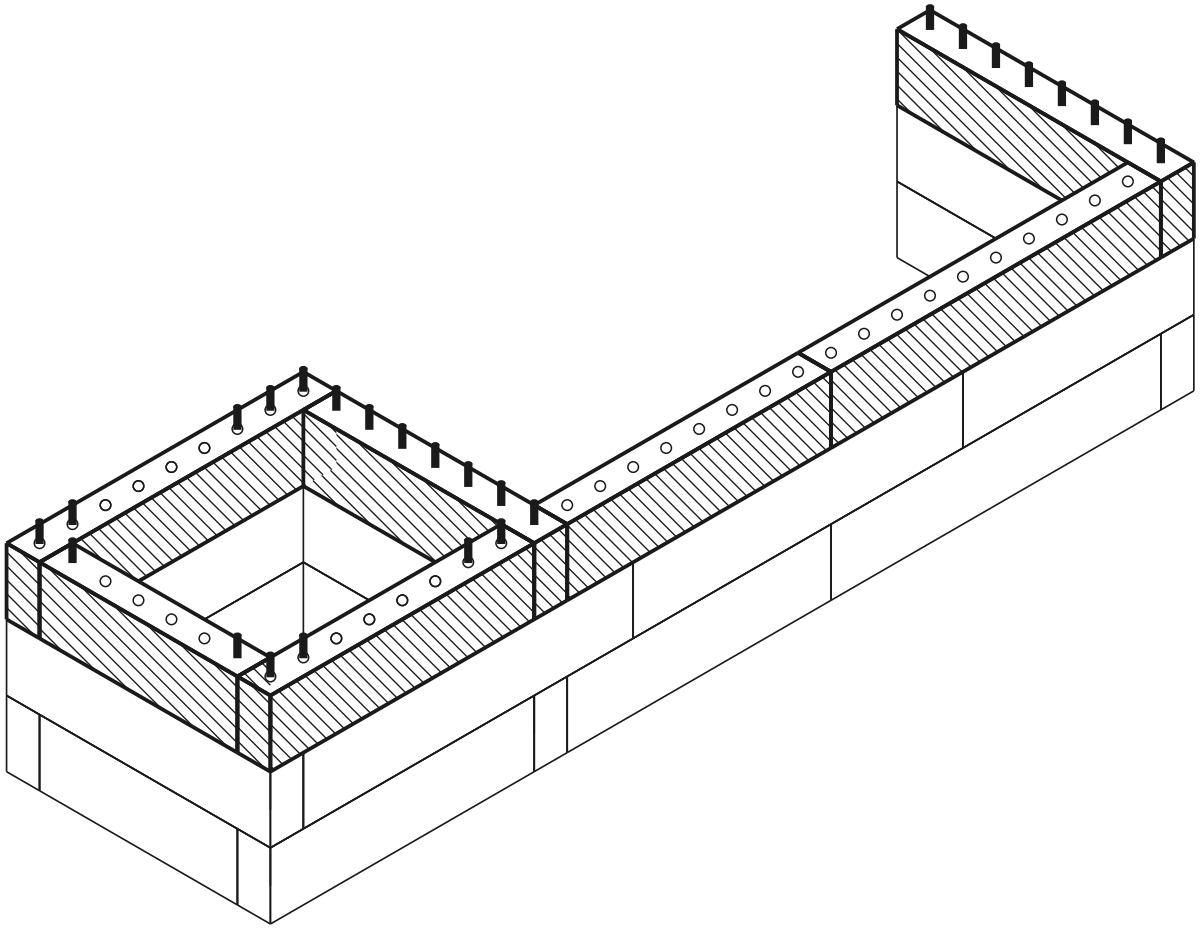

current course built dowel hole

TOP VIEW - WHICH PART GOES WHERE

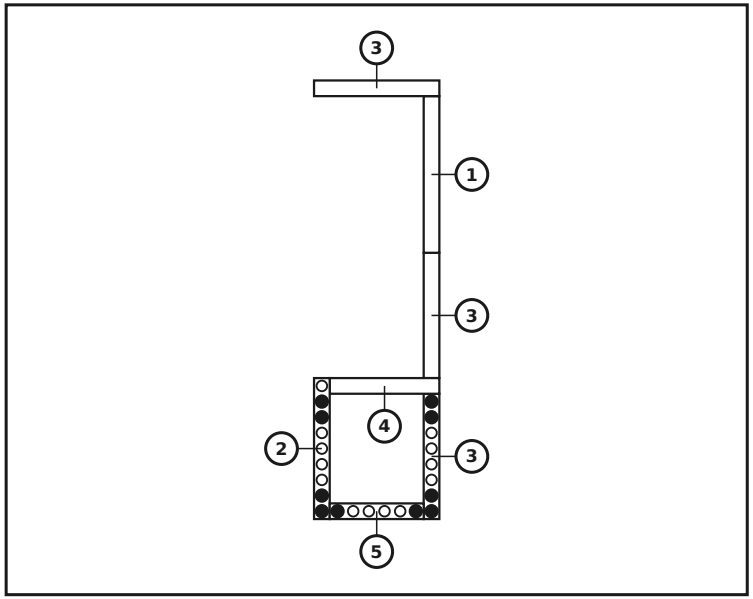

PARTS IN THIS COURSE

no.	size (mm)	drawing	holes	qty
5	60 x 120 x 360		6× Ø12	1
4	60 x 120 x 420		7× Ø12	1
3	60 x 120 x 480		8× Ø12	3
2	60 x 120 x 540		9× Ø12	1
1	60 x 120 x 600		10× Ø12	1
	Connectors	●		10

Course 4 / 4 (top cap)

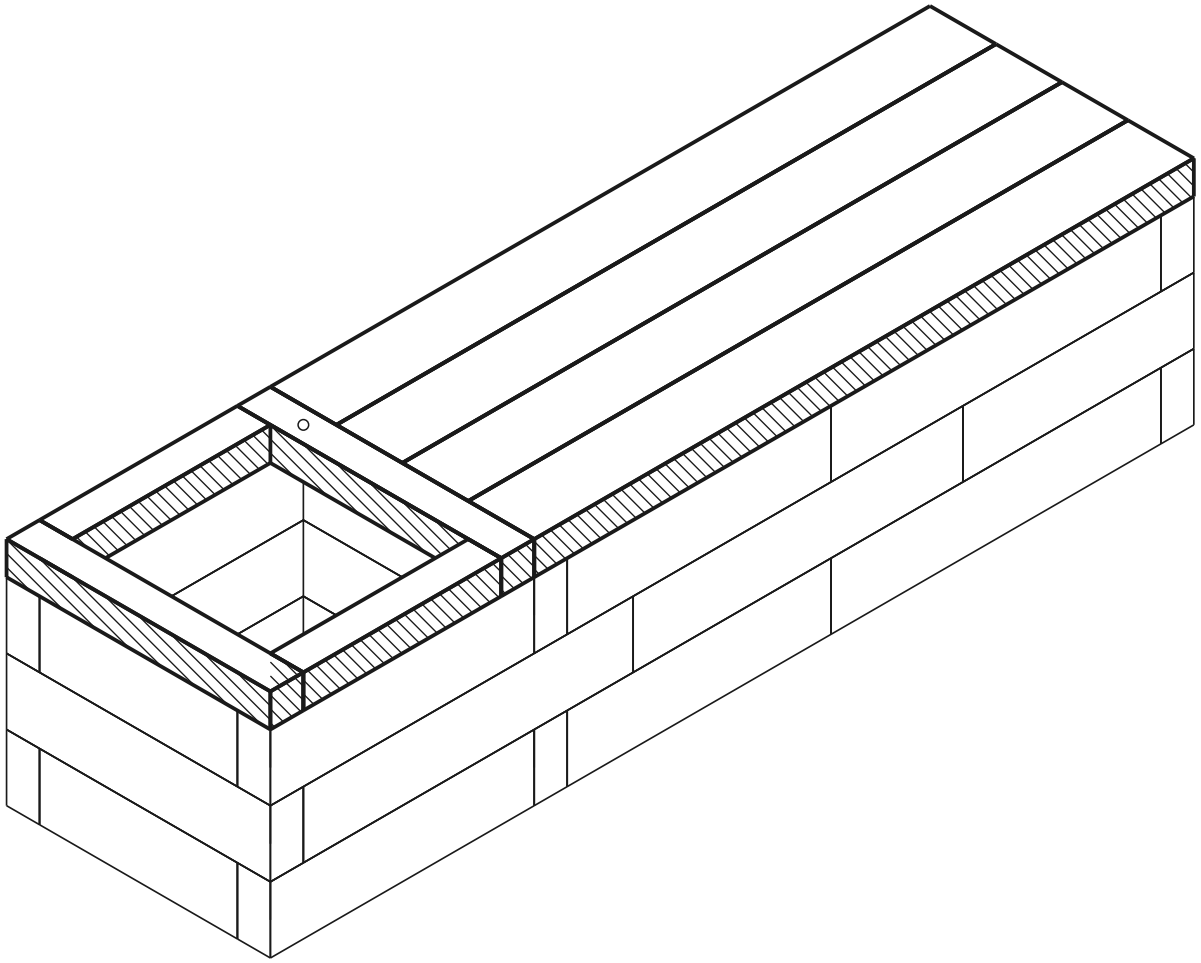

current course built dowel hole

TOP VIEW - WHICH PART GOES WHERE

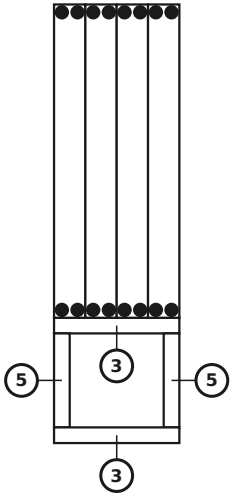

PARTS IN THIS COURSE

no.	size (mm)	drawing	holes	qty
5	60 x 60 x 360		6× Ø12	2
3	60 x 60 x 480		8× Ø12	2
	Connectors			0

Fitting the bench seat

size (mm)	drawing	holes	qty
60 x 120 x 1200		4× Ø12	4
Connectors			16

Finished model

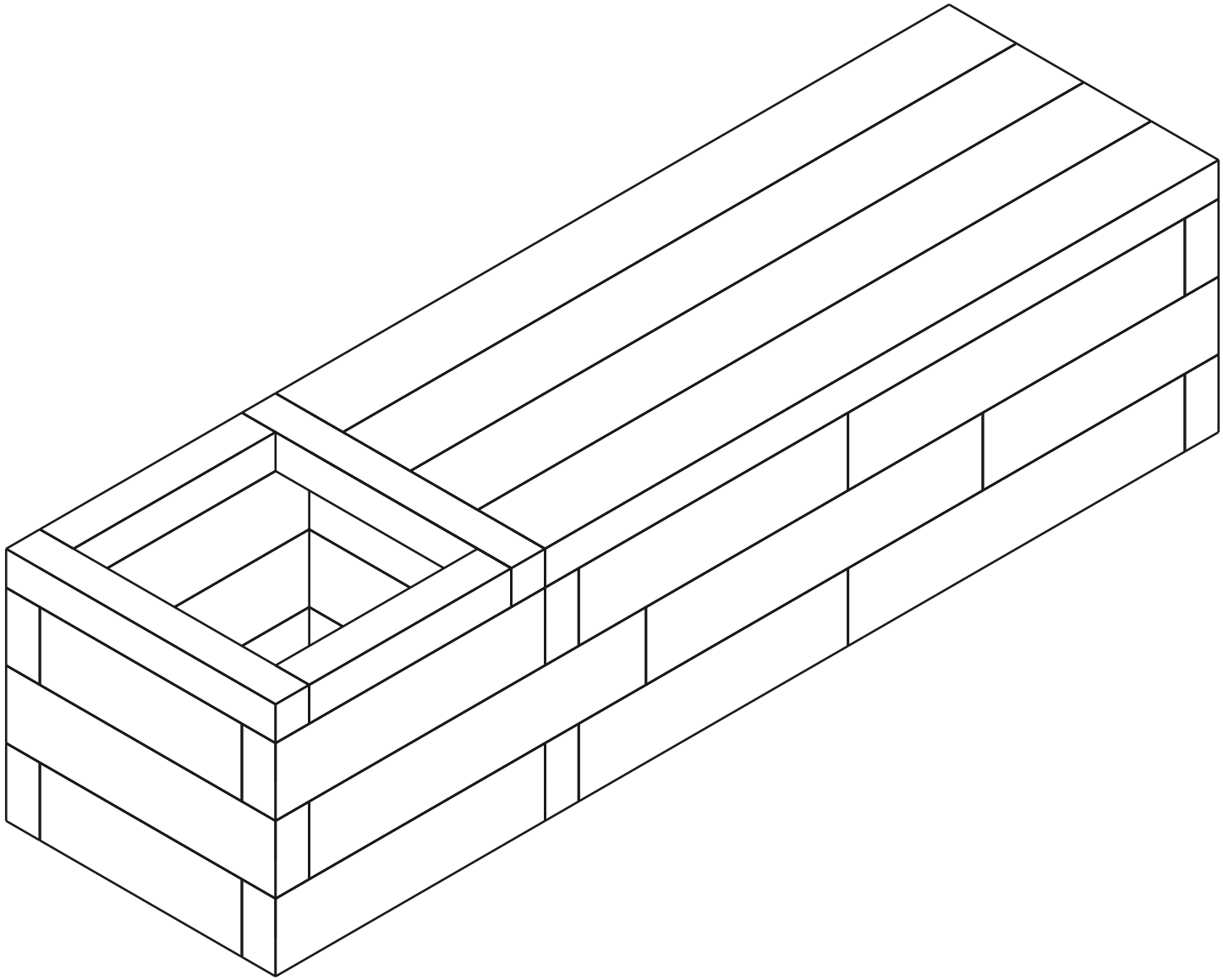

Bill of materials (BOM)

Part	Role	Qty
60×120×600 mm (BOTTOM)	bottom	1
60×120×540 mm (BOTTOM)	bottom	1
60×120×480 mm (BOTTOM)	bottom	3
60×120×420 mm (BOTTOM)	bottom	1
60×120×360 mm (BOTTOM)	bottom	1
60×120×600 mm	middle	3
60×120×540 mm	middle	1
60×120×480 mm	middle	4
60×120×420 mm	middle	5
60×120×360 mm	middle	1
60×60×480 mm (TOP)	top	2
60×60×360 mm (TOP)	top	2
Bench seat 1200mm	seat	4
Connector (12×70 mm pin)	-	72

Total: 29 parts